Camden Pottery Company

CAMDEN, N.J.

CAPOCO

CATALOG-H

/50

Vitreous China

PLUMBING FIXTURES
AND
SPECIALTIES

CATALOG H

CAMDEN POTTERY COMPANY
INCORPORATED
Main Office and Works
CAMDEN, NEW JERSEY

MANUFACTURERS OF HIGHEST QUALITY
TWO-FIRE VITREOUS CHINAWARE

PRINTED IN U. S. A.

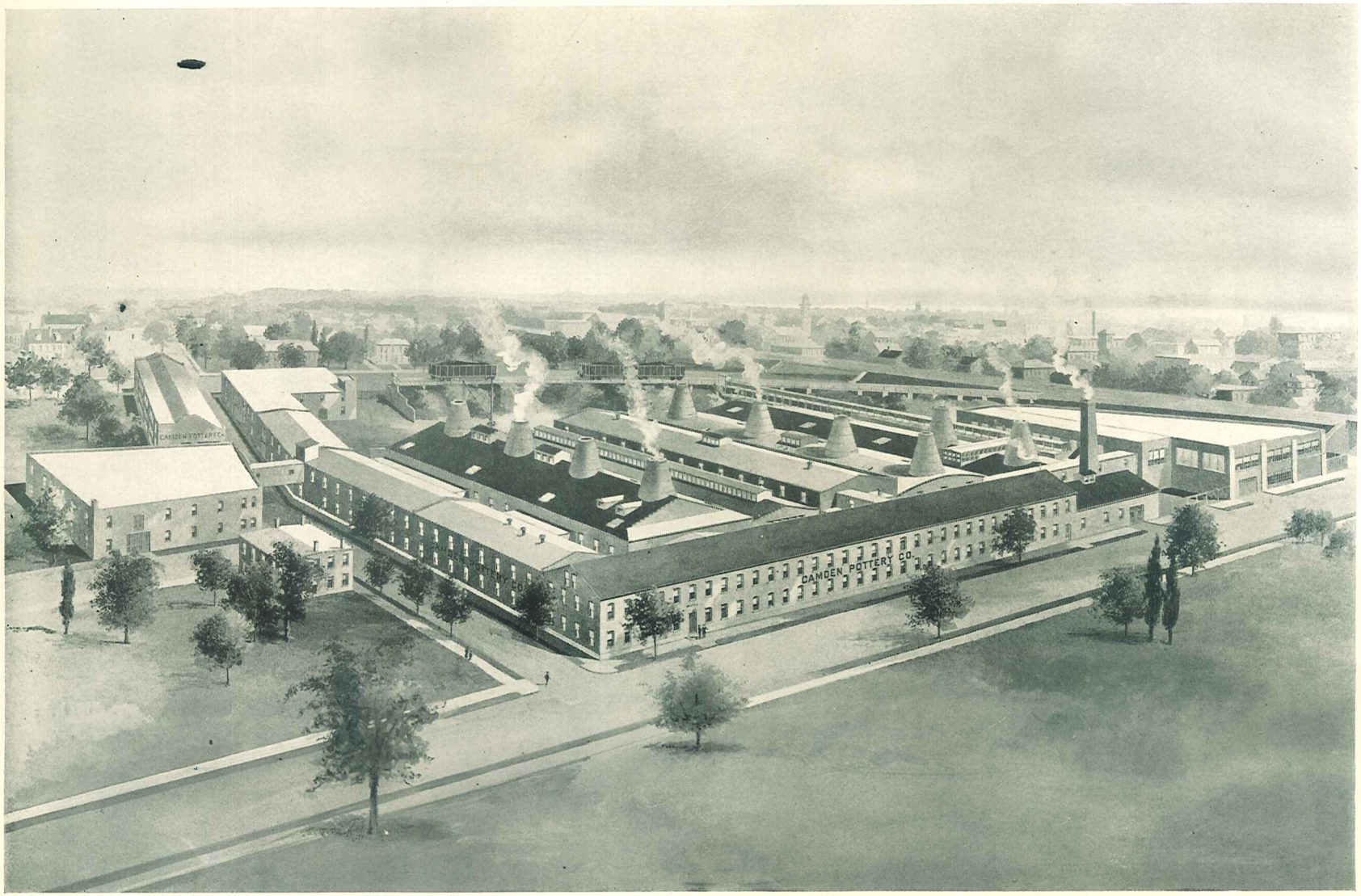

THE HOME OF "CAPOCO" SANITARY EARTHENWARE

FOREWORD

We present this, our Catalog H, with a certain amount of justifiable pride, because we believe that it well represents our concern and properly illustrates the articles we manufacture. It is the eighth of a series of catalogs issued by the Camden Pottery Company.

Times and styles have changed since our first little Catalog A appeared. Most of the lavatories, closets and tanks shown therein have gone the way of the bustle, the mustache cup and the hansom cab. And yet one feature of each of those fixtures manufactured so many years ago is incorporated in every article shown in this Catalog – – – – Quality.

It has always been the policy of our concern to furnish the finest quality material with the best possible service at a price commensurate with such quality and service. We are proud to say that we have customers on our books today with whom we did business thirty years ago. This, we believe, is due to the policy set forth above, and to the continuance of that policy we pledge ourselves anew.

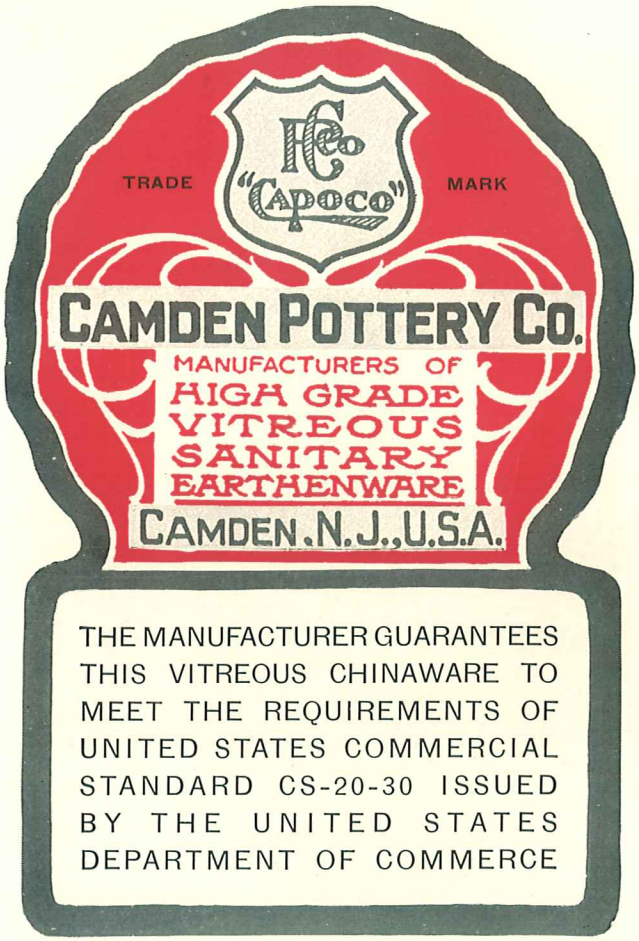

Every piece of Capoco Vitreous China bears the above label, showing that it has been graded according to the grading rules established by the Bureau of Standards of the Department of Commerce.

Before this label is affixed, each piece of ware undergoes a thorough inspection, and the ultimate owner is assured of receiving Genuine Two-Fire Vitreous Chinaware of the first selection.

General Information

¶ We have arranged this catalog with the idea of giving complete detail of each fixture illustrated, and of causing our customers the least amount of difficulty in locating the information they desire. Each Lavatory and Closet Combination has complete roughing measurements on the back of the illustration. Pages showing separate closets carry necessary measurements incorporated in the descriptive matter. We also give complete weight for each fixture.

¶ We have taken great care in preparing our measurements and weights. In common with other manufacturers of vitreous china, we require a reasonable tolerance, and therefore cannot guarantee these measurements and weights to be absolutely exact.

¶ We suggest that you order by Plate Number wherever possible, specifying whether the fixtures are to be furnished exactly as shown or otherwise.

¶ All goods are sold F. O. B. CAMDEN, with carload rate of freight allowed on carload and less than carload shipments. Claims for breakage in transit must be filed by the consignee.

¶ Customers must request permission before returning goods for credit.

¶ We gladly replace any defective fixture where the defect occurs within six months of installation, but we cannot be responsible for any labor charge or consequential damage.

¶ Camden Vitreous China is made of the finest materials procurable. It is two-fired to a maximum temperature of twenty-four hundred degrees Fahrenheit, producing a perfect fusion of the body and the glaze, and creating a ware that is non-absorbent, impervious to acids, and having a hard, flint-like surface which a damp cloth will keep perfectly clean.

Reg
"Capoco"

CAMDEN LAVATORIES

LAVATORIES

LAVATORIES

"Capoco"

CAMDEN LAVATORIES

Plate 101-H

"Cambar" Two-Fire Vitreous China Pedestal Lavatory

Rectangular Basin with Hooded Overflow, Anti-Splash Rim and Concealed Integral Supply Nozzle; fitted with Chrome Finish Artline Combination Fixture, Chrome Finish 3/8" I. P. S. Supplies with Chrome Finish Angle Stops and Escutcheons, and Chrome Finish 1¼" Cast Brass "P" Trap. Angle Wall Brackets and Tie Bolt.

This Lavatory can also be furnished with Over-the-Rim Spout or Compression Faucets.

Size 24 x 20". Approximate weight crated (less fittings) 120 pounds.

For Roughing-In measurements see back of this page.

CAMDEN LAVATORIES

Roughing-In Measurements

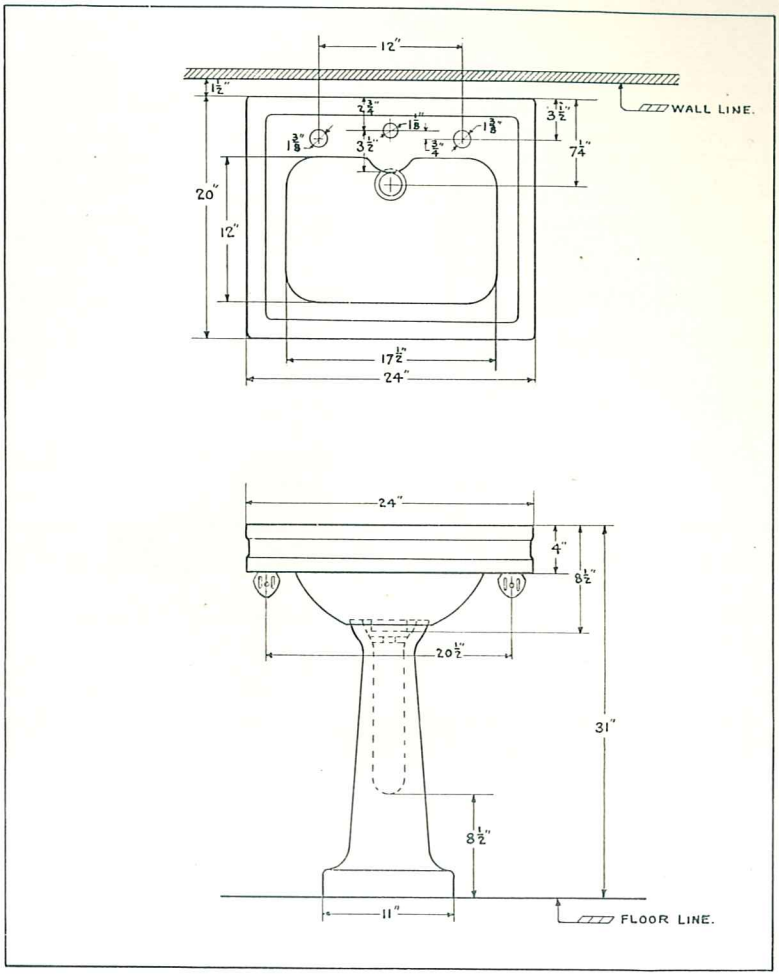

Plate 101-H—"Cambar"

All measurements in this catalog may vary from ¼" to ½".

CAMDEN LAVATORIES

Plate 102-H

"Cambar" Two-Fire Vitreous China Pedestal Lavatory

Rectangular Basin with Hooded Overflow, Anti-Splash Rim and Concealed Integral Supply Nozzle; fitted with Chrome Finish Artline Combination Fixture, Chrome Finish 3/8" I. P. S. Supplies with Chrome Finish Angle Stops and Escutcheons and Chrome Finish 1¼" Cast Brass "P" Trap. Angle Wall Brackets and Tie Bolt.

This Lavatory can also be furnished with Over-the-Rim Spout or Compression Faucets.

Size 24 x 20". Approximate weight crated (less fittings) 120 pounds.

For Roughing-In measurements see back of this page.

CAMDEN LAVATORIES

Roughing-In Measurements

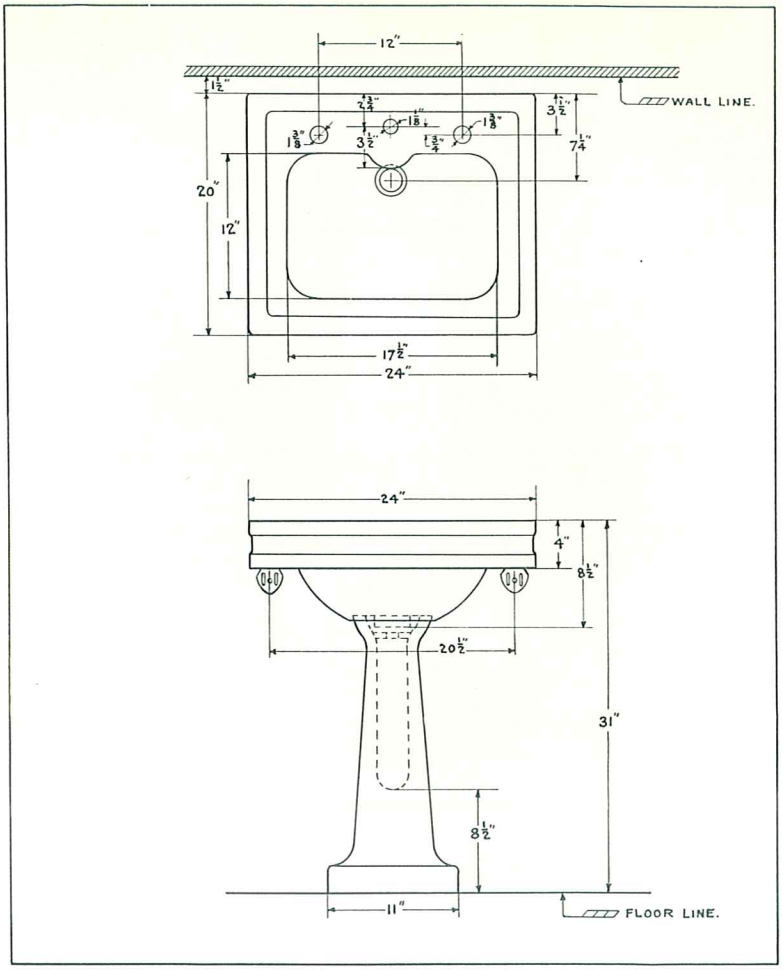

Plate 102-H—"Cambar"

All measurements in this catalog may vary from ¼" to ½".

CAMDEN LAVATORIES

Plate 103-H

"Cranston" Two-Fire Vitreous China Pedestal Lavatory

Rectangular Basin with Hooded Overflow and Anti-Splash Rim; fitted with Chrome Finish Artline Combination Fixture with Over-the-Rim Spout, Chrome Finish 3/8" I. P. S. Supplies with Chrome Finish Angle Stops and Escutcheons and Chrome Finish 1¼" Cast Brass "P" Trap. Angle Wall Brackets and Tie Bolt.

This Lavatory can also be furnished with Concealed Integral Supply Nozzle or Compression Faucets.

Size 22 x 19". Approximate weight crated (less fittings) 105 pounds.

For Roughing-In Measurements see back of this page.

CAMDEN LAVATORIES

Roughing-In Measurements

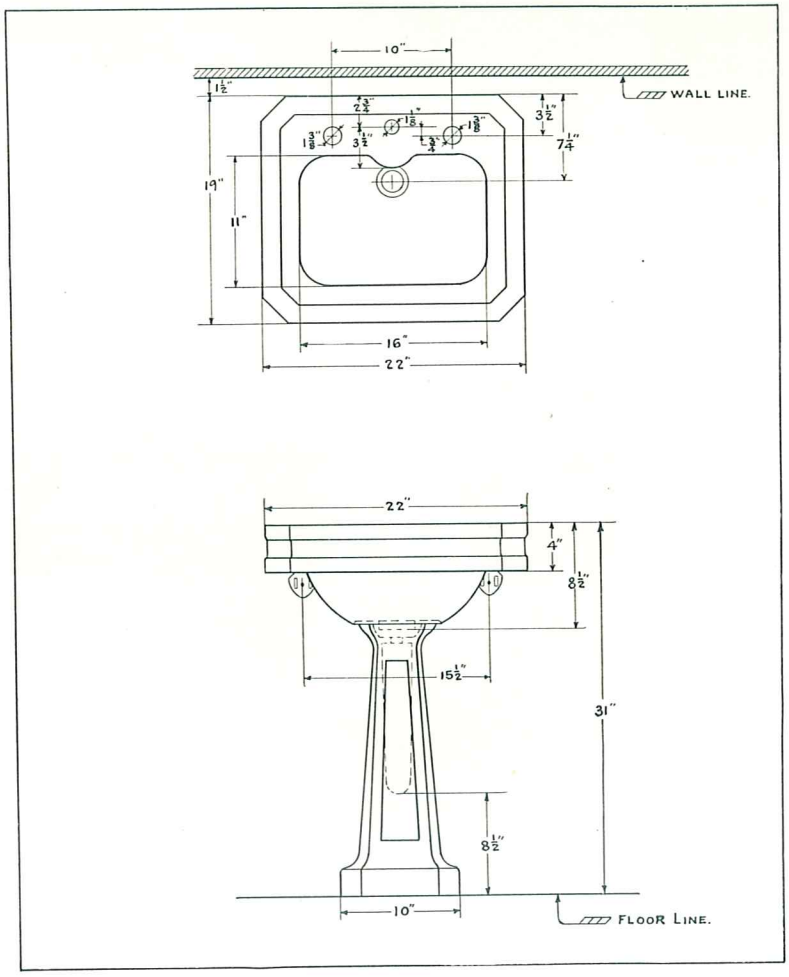

Plate 103-H—"Cranston"

All measurements in this catalog may vary from ¼" to ½".

CAMDEN LAVATORIES

Plate 104-H

"Cranston" Two-Fire Vitreous China Pedestal Lavatory

Rectangular Basin with Hooded Overflow Anti-Splash Rim and Concealed Integral Supply Nozzle; fitted with Chrome Finish Combination Fixture with China Cross-Arm Handles and Escutcheons, Pop-Up Waste with China Knob and China Escutcheon, Chrome Finish 3/8" I. P. S. Supplies with Chrome Finish Angle Stops with China Cross-Arm Handles and China Escutcheons and Chrome Finish 1¼" Cast Brass "P" Trap. Angle Wall Brackets and Tie Bolt.

This Lavatory can also be furnished with Over-the-Rim Spout or Compression Faucets.

Size 22 x 19". Approximate weight crated (less fittings) 105 pounds.

For Roughing-In measurements see back of this page.

CAMDEN LAVATORIES

Roughing-In Measurements

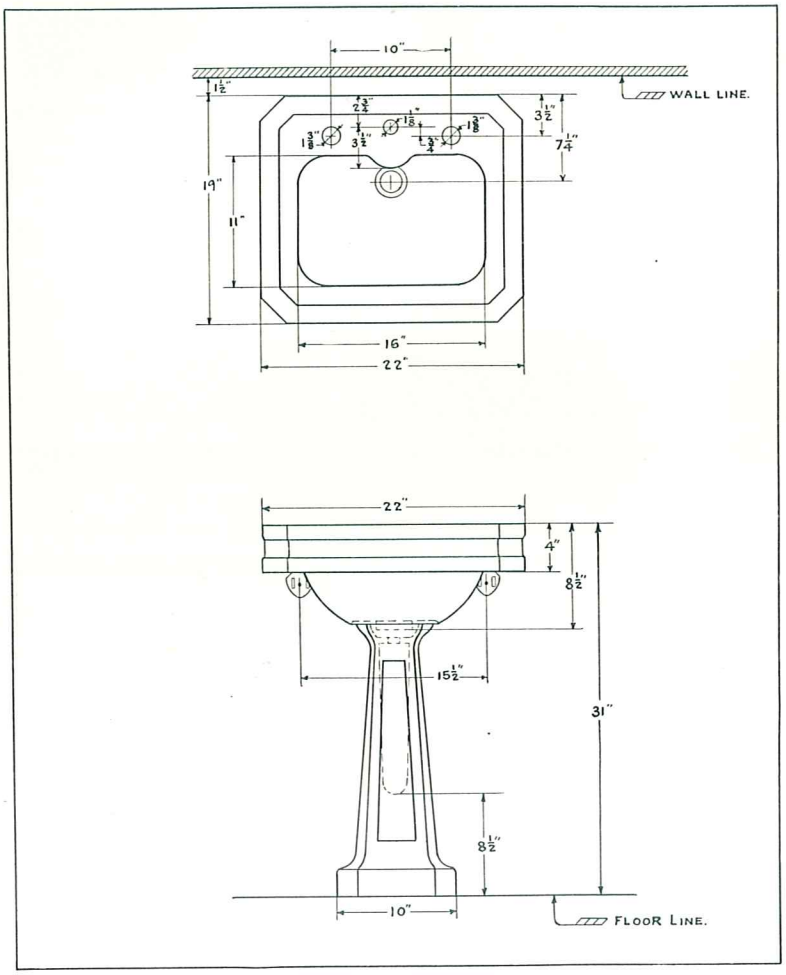

Plate 104-H — "Cranston"

All measurements in this catalog may vary from ¼" to ½".

CAMDEN LAVATORIES

Plate 105-H—"Condon"

Plate 105-H

"Condon" Two-Fire Vitreous China Pedestal Lavatory

Rectangular Basin with Hooded Overflow and Anti-Splash Rim; fitted with Chrome Finish Combination Fixture with China Cross-Arm Handles and Escutcheons, Chrome Finish Over-the-Rim Spout; Pop-Up Waste with China Knob; Chrome Finish 3/8" I. P. S. Supplies with Chrome Finish Angle Stops with China Cross-Arm Handles and China Escutcheons, and Chrome Finish 1¼" Cast Brass "P" Trap. Angle Wall Brackets and Tie Bolt.

This Lavatory can also be furnished with Concealed Integral Supply Nozzle or Compression Faucets.

Size 21 x 19". Approximate weight crated (less fittings) 100 pounds.

For Roughing-In measurements see back of this page.

Plate 106-H

"Condon" Two-Fire Vitreous China Pedestal Lavatory

Rectangular Basin with Hooded Overflow Anti-Splash Rim, and Concealed Integral Supply Nozzle; fitted with Chrome Finish Combination Wall Fixture with Pop-Up Waste; Chrome Finish 1¼" Cast Brass "P" Trap. Angle Wall Brackets and Tie Bolt.

This Lavatory can also be furnished with Combination Slab Fixture or Compression Faucets.

Size 21 x 19". Approximate weight crated (less fittings) 100 pounds.

For Roughing-In measurements see back of this page.

Plate 106-H—"Condon"

CAMDEN LAVATORIES

Roughing-In Measurements

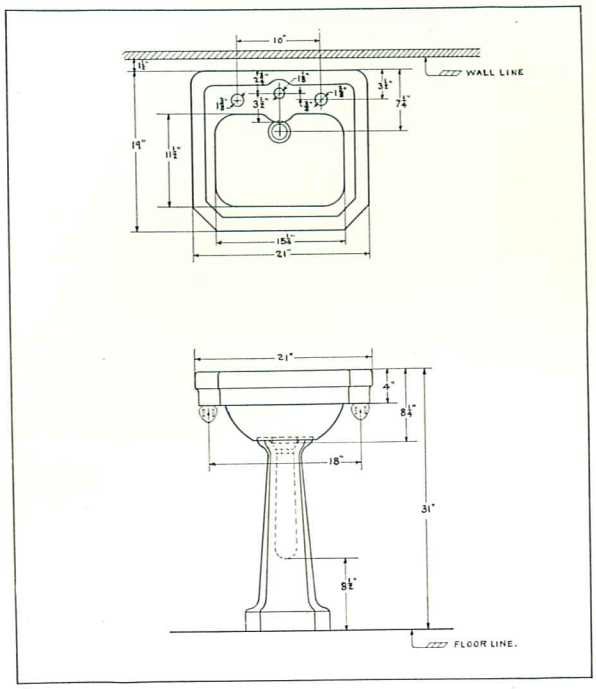

All measurements in this catalog may vary from ¼″ to ½″.

Plate 105-H—"Condon"

All measurements in this catalog may vary from ¼″ to ½″.

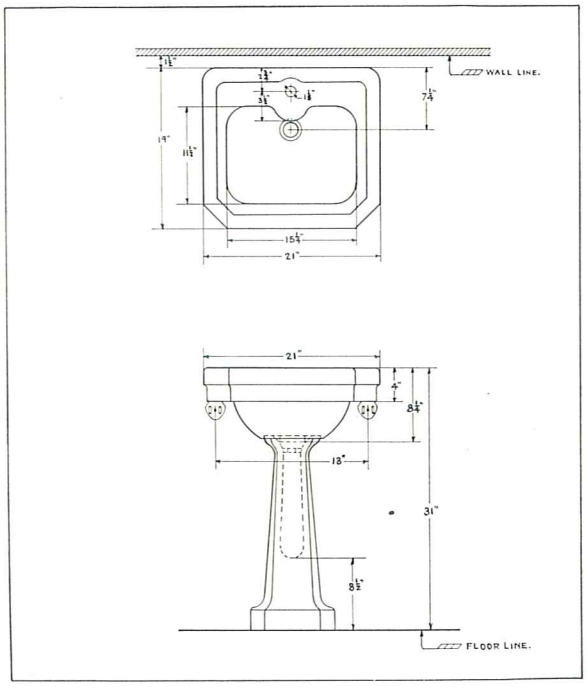

Plate 106-H—"Condon"

CAMDEN LAVATORIES

Plate 107-H—"Croyden"

Plate 107-H

"Croyden" Two-Fire Vitreous China Square Leg Lavatory

Rectangular Basin with Hooded Overflow, Anti-Splash Rim and Concealed Integral Supply Nozzle; fitted with All-White China Combination Fixture with Pop-Up Waste, China Knob and Escutcheon, Chrome Finish 3/8" I. P. S. Supplies with Chrome Finish Angle Stops with China Cross-Arm Handles and Escutcheons and Chrome Finish 1¼" Cast Brass "P" Trap. Angle Wall Brackets and Leg Tie Rod.

This Lavatory can also be furnished with Over-the-Rim Spout or Compression Faucets.

Size 24 x 20". Approximate weight crated (less fittings) 110 pounds.

For Roughing-In measurements see back of this page.

Plate 108-H

"Calvert" Two-Fire Vitreous China Square Leg Lavatory

Rectangular Basin with Hooded Overflow and Anti-Splash Rim; fitted with All-Chrome Finish Combination Fixture with Over-the-Rim Spout, Chrome Finish 3/8" I. P. S. Supplies with Chrome Finish Wheel Handle Angle Stops and Escutcheons, and Chrome Finish 1¼" Cast Brass "P" Trap. Angle Wall Brackets and Leg Tie Rod.

This Lavatory can also be furnished with Concealed Integral Supply Nozzle or Compression Faucets.

Size 22 x 19". Approximate weight crated (less fittings) 90 pounds.

For Roughing-In measurements see back of this page.

Plate 108-H—"Calvert"

CAMDEN LAVATORIES

Roughing-In Measurements

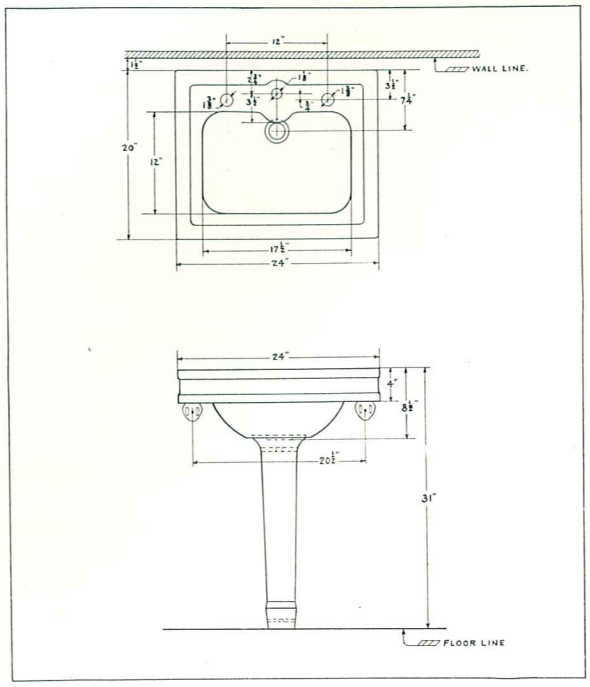

All measurements in this catalog may vary from ¼″ to ½″.

Plate 107-H — "Croyden"

All measurements in this catalog may vary from ¼″ to ½″.

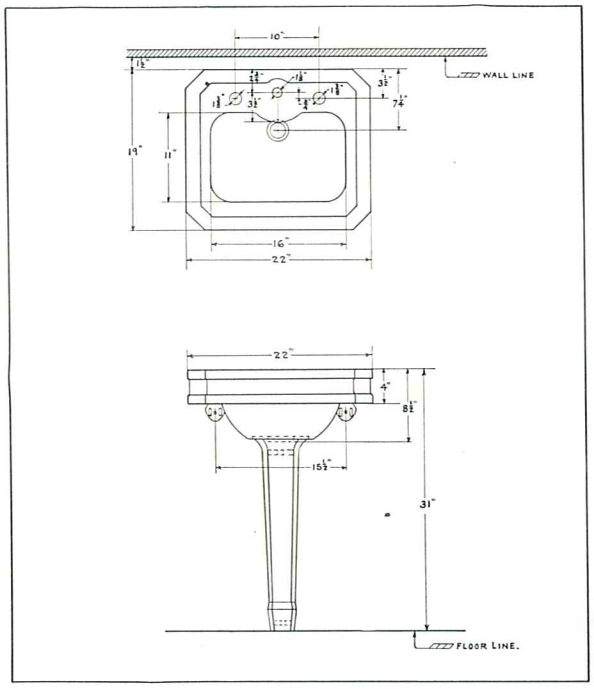

Plate 108-H — "Calvert"

CAMDEN LAVATORIES

Plate 109-H—"Colmar"

Plate 109-H

"Colmar" Two-Fire Vitreous China Square Leg Lavatory

Rectangular Basin with Hooded Overflow and Anti-Splash Rim; fitted with Special All-Chrome Combination Fixture with Lever Handles, Over-the-Rim Spout and Pop-Up Waste, Chrome Finish 3/8" I. P. S. Supplies with Chrome Finish Wheel Handle Angle Stops and Escutcheons and Chrome Finish 1¼" Cast Brass "P" Trap. Angle Wall Brackets and Leg Tie Rod.

This Lavatory can also be furnished with Regular Combination Fixture or Compression Faucets.

Size 21 x 19". Approximate weight crated (less fittings) 85 pounds.

For Roughing-In measurements see back of this page.

Plate 110-H

"Colmar" Two-Fire Vitreous China Square Leg Lavatory

Rectangular Basin with Hooded Overflow, Anti-Splash Rim and Concealed Integral Supply Nozzle; fitted with All-White China Combination Wall Fixture with Pop-Up Waste, China Knob and Escutcheon, Chrome Finish 1¼" Cast Brass "P" Trap. Angle Wall Brackets and Leg Tie Rod.

This Lavatory can also be furnished with Combination Over-the-Rim Spout Fixture or Compression Faucets.

Size 21 x 19". Approximate weight crated (less fittings) 85 pounds.

For Roughing-In measurements see back of this page.

Plate 110-H—"Colmar"

CAMDEN LAVATORIES

Roughing-In Measurements

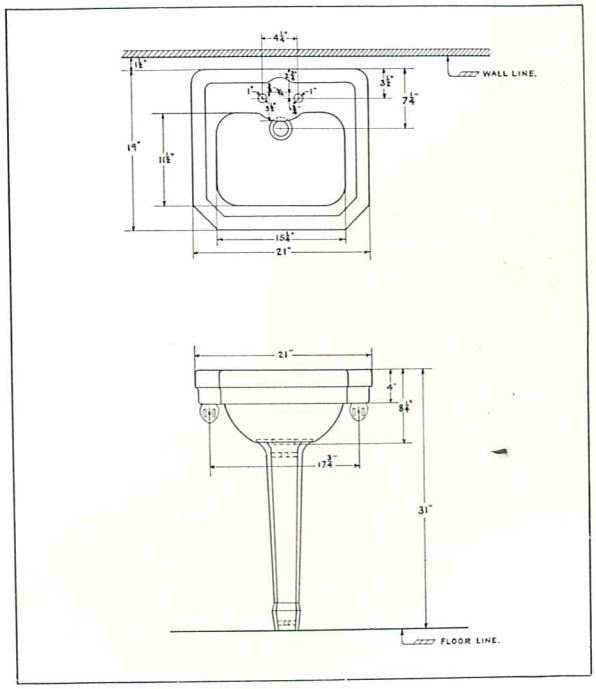

All measurements in this catalog may vary from ¼″ to ½″.

Plate 109-H—"Colmar"

All measurements in this catalog may vary from ¼″ to ½″.

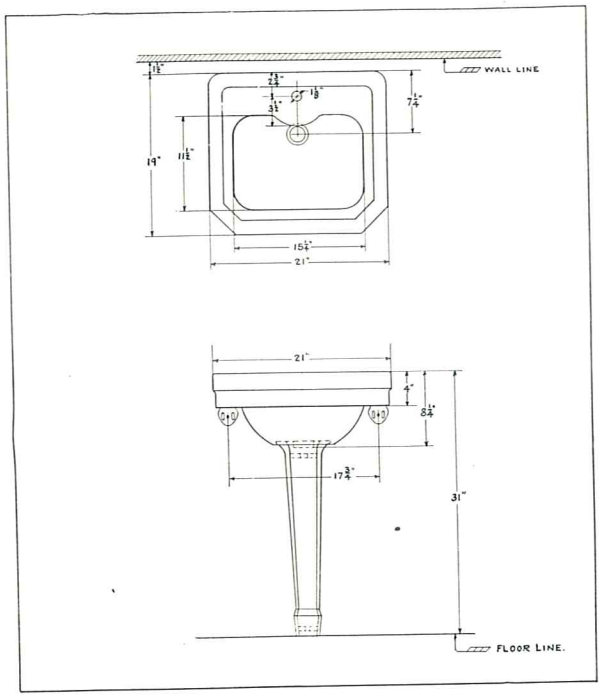

Plate 110-H—"Colmar"

CAMDEN LAVATORIES

Plate 111-H—"Carver"

Plate 111-H

"Carver" Two-Fire Vitreous China Square Leg Lavatory

With Back, Rectangular Basin, Hooded Overflow and Anti-Splash Rim; fitted with N. P. Compression Faucets with China Cross-Arm Handles, N. P. Pop-Up Waste with China Knob, N. P. 3/8" I. P. S. Supplies with N. P. Angle Stops with China Cross-Arm Handles and Escutcheons, N. P. 1¼" Cast Brass "P" Trap. Concealed Wall Hanger and Leg Tie Rod.

Size 20 x 19". Approximate weight crated (less fittings) 85 pounds.

For Roughing-In measurements see back of this page.

Plate 112-H

"Celtic" Two-Fire Vitreous China Lavatory

With Back, Rectangular Basin, Hooded Overflow and Anti-Splash Rim; fitted with N. P. Compression Faucets with China Cross-Arm Handles, N. P. Pop-Up Waste with China Knob, N. P. 3/8" I. P. S. Supplies with N. P. Angle Stops with China Cross-Arm Handles and Escutcheons, N. P. 1¼" Cast Brass "P" Trap and Concealed Wall Hanger.

Size 20 x 19". Approximate weight crated (less fittings) 65 pounds.

For Roughing-In measurements see back of this page.

Plate 112-H—"Celtic"

CAMDEN LAVATORIES

Roughing-In Measurements

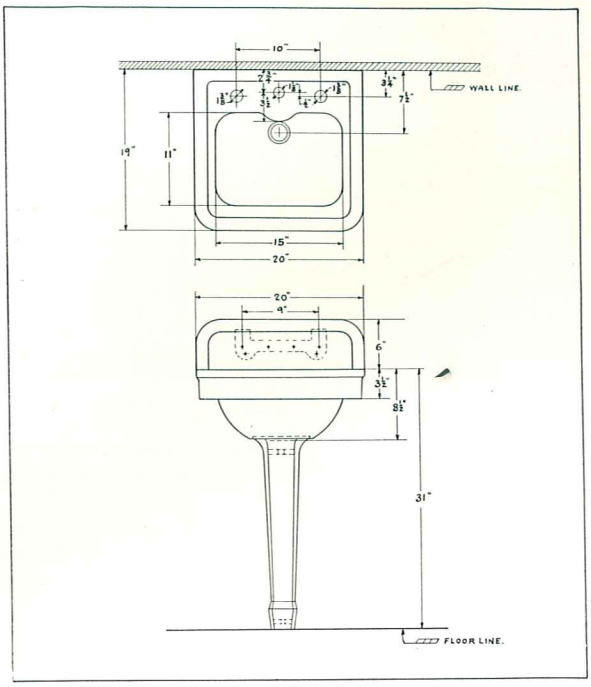

All measurements in this catalog may vary from ¼″ to ½″.

Plate 111-H — "Carver"

All measurements in this catalog may vary from ¼″ to ½″.

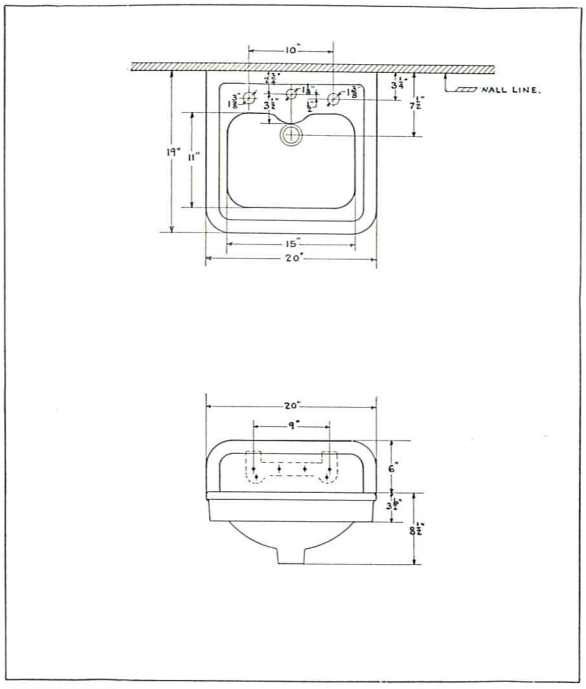

Plate 112-H — "Celtic"

CAMDEN LAVATORIES

Plate 113-H

"Clifton" Two-Fire Vitreous China Round Front Lavatory with Back, Oval Basin, Open Overflow and Full Splash Rim; fitted with N. P. Compression Faucets, China Cross-Arm Handles, N. P. Pop-Up Waste with China Knob, N. P. 3/8" I. P. S. Supplies with N. P. Angle Stops with China Cross-Arm Handles and Escutcheons, N. P. 1¼" Cast Brass "P" Trap and Concealed Wall Hanger.

Size 20 x 19". Approximate weight crated (less fittings) 70 pounds.

Plate 114-H

"Cornwall" Two-Fire Vitreous China Straight Front Lavatory with Back, Rectangular Basin, Open Overflow and Anti-Splash Rim; fitted with Special N. P. Combination Fixture, China Lever Handles, N. P. Pop-Up Waste with China Knob, N. P. 3/8" I. P. S. Supplies to Wall with N. P. Escutcheons, N. P. 1¼" Cast Brass "P" Trap, Concealed Wall Hanger.

Size 18½ x 15". Approximate weight crated (less fittings) 45 pounds.

Plate 115-H

"Cornwall" Two-Fire Vitreous China Straight Front Lavatory with Back, Rectangular Basin, Open Overflow and Anti-Splash Rim; fitted with N. P. Compression Faucets China Indexed, N. P. Chain Stay, Chain and Rubber Plug, N. P. 3/8" I. P. S. Supplies to Wall with N. P. Escutcheons, N. P. 1¼" Cast Brass "P" Trap, Concealed Wall Hanger.

Size 18½ x 15". Approximate weight crated (less fittings) 45 pounds.

Plate 116-H

"Crusoe" Two-Fire Vitreous China Round Front Lavatory with Back, Oval Basin, Open Overflow and Full Splash Rim; fitted with N.P. Compression Faucets China Indexed, N.P. Chainstay, Chain and Rubber Plug, N. P. 3/8" I. P. S. Supplies to Wall with N. P. Escutcheons and N. P. 1¼" Cast Brass "P" Trap.

Size 17 x 16". Approximate weight crated (less fittings) 50 pounds.

For Roughing-In measurements see back of this page.

CAMDEN LAVATORIES

Roughing-In Measurements

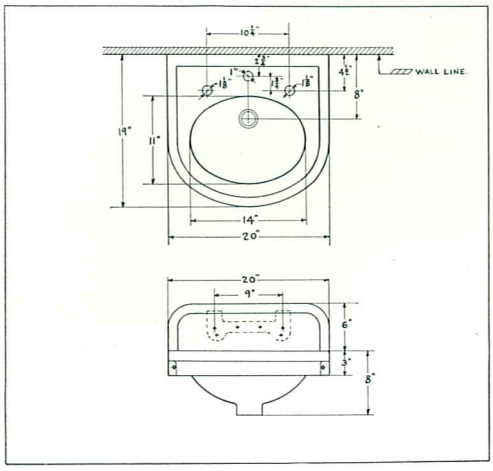

Plate 113-H—"Clifton"

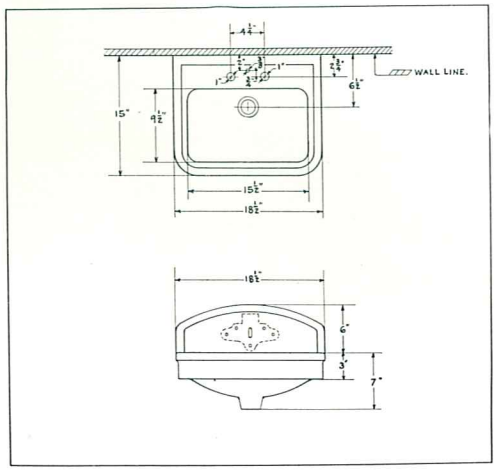

Plate 114-H—"Cornwall"

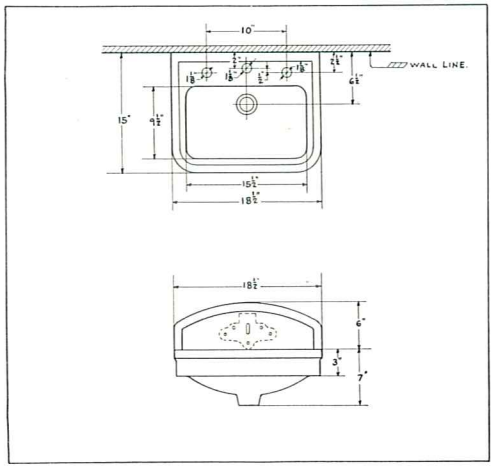

Plate 115-H—"Cornwall"

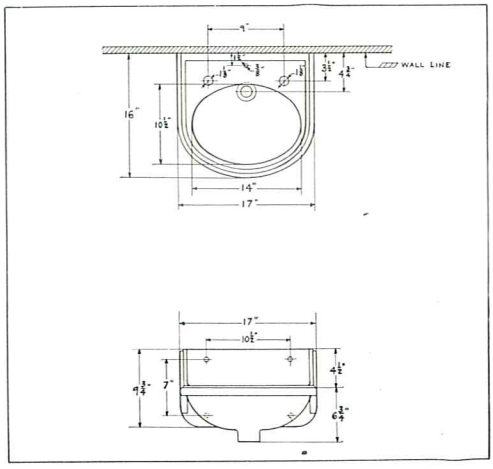

Plate 116-H—"Crusoe"

All measurements in this catalog may vary from ¼" to ½".

CAMDEN LAVATORIES

Plate 117-H

"Cardiff" Two-Fire Vitreous China Corner Lavatory with Back, Oval Basin, Open Overflow and Full Splash Rim; fitted with N. P. compression Faucets with China Cross-Arm Handles, N. P. Pop-Up Waste with China Knob, N. P. ⅜" I. P. S. Supplies with N. P. Angle Stops with China Cross-Arm Handles and N. P. Escutcheons, N. P. 1¼" Cast Brass "P" Trap and Concealed Wall Hangers.

Size 16½ x 16½". Approximate weight crated (less fittings) 85 pounds.

Plate 118-H

"Caldwell" Two-Fire Vitreous China Corner Lavatory with Back, Round Basin, Open Overflow; fitted with N. P. Compression Faucets China Indexed, N. P. Chainstay, Chain and Rubber Plug, N. P. ⅜" I. P. S. Supplies to Wall with N. P. Escutcheons and N. P. 1¼" Cast Brass "P" Trap.

Size 14 x 14". Approximate weight crated (less fittings) 32 pounds.

Plate 119-H same as above, except in 12 x 12" size.

Plate 120-H

"Concord" Two-Fire Vitreous China Straight Front Lavatory with Back, Round Basin, Open Overflow; fitted with N. P. Quick-Pression Faucets, Metal Lever Handles, N. P. Chain and Rubber Plug, N. P. ⅜" I. P. S. Supplies to Wall with N. P. Escutcheons and N. P. 1¼" Cast Brass "P" Trap.

Size 14½ x 14". Approximate weight crated (less fittings) 30 pounds.

Plate 121-H

"Carden" Two-Fire Vitreous China Round Front Lavatory with Back, Round Basin, Open Overflow; fitted with N. P. Quick-Pression Faucets, China Lever Handles, N. P. Chain and Rubber Plug, N. P. ⅜" I. P. S. Supplies to Wall with N. P. Escutcheons and N. P. 1¼" Cast Brass "P" Trap.

Size 12 x 12". Approximate weight crated (less fittings) 25 pounds.

For Roughing-In measurements see back of this page.

CAMDEN LAVATORIES

Roughing-In Measurements

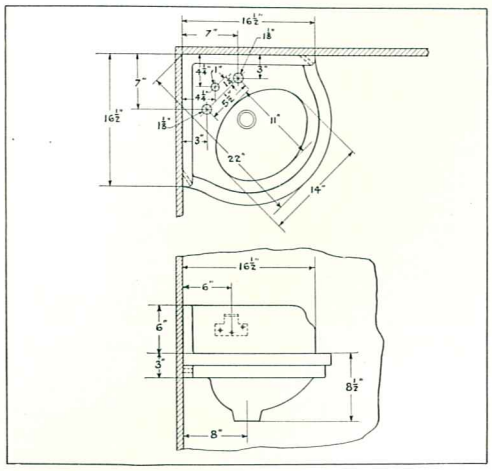

Plate 117 H—"Cardiff"

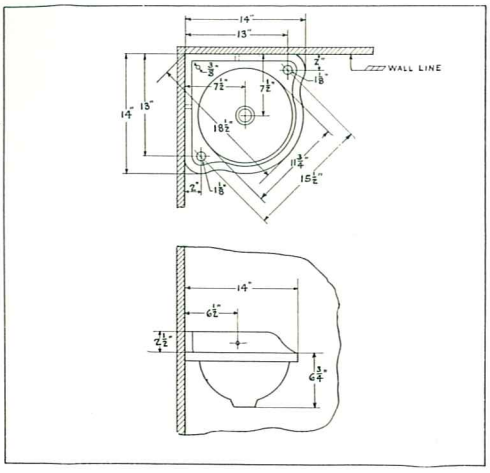

Plate 118-H—"Caldwell"

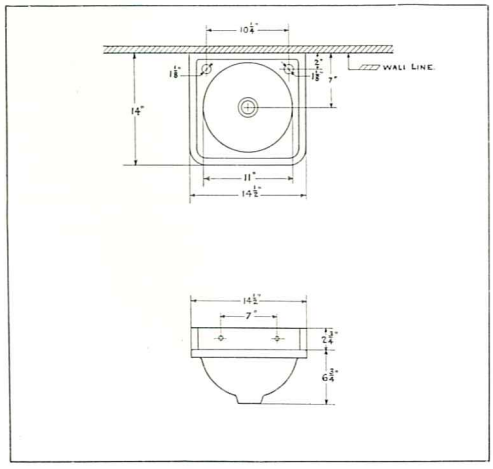

Plate 120-H—"Concord"

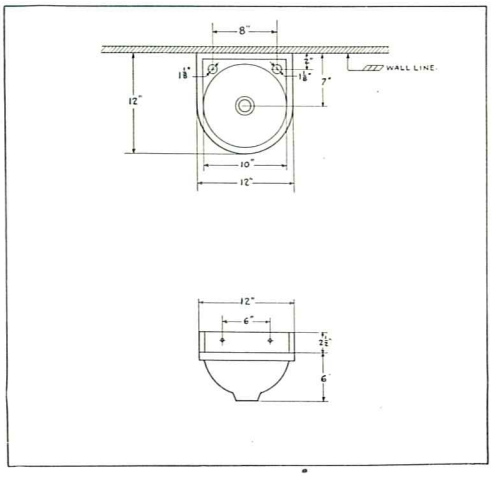

Plate 121-H—"Carden"

All measurements in this catalog may vary from ¼″ to ½″.

CAMDEN
CLOSET COMBINATIONS

CLOSET COMBINATIONS

COMBINATIONS

"CAPOCO"

CAMDEN CLOSET COMBINATIONS

Plate 201-H — "Inaudio"

Plate 201-H

"Inaudio" Two-Fire Vitreous China Quiet Syphon Jet Closet with Special Refill Chamber, Non-Soiling Cut Back Rim—flushed all around, Large Water Surface, Deep Water Seal and China Bolt Caps. Vitreous China Eight-Gallon Tank, fitted with Curtin Concealed Supply Integral Stop Ballcock, Curtin Flush Valve, Hard-Rubber Float, Capoco Vitreous China Bottom Ball Pull, and a one-piece China Straight Flush Connection. Special guaranteed All-White Pyralin Finish Seat and Cover, with Concealed Hinge.

	TANK	BOWL	SEAT
Approx. wt. crated,	75 lbs.	75 lbs.	10 lbs.

For Roughing-In measurements see back of this page.

Plate 202-H

"Inaudio" Two-Fire Vitreous China Quiet Syphon Jet Closet with Special Refill Chamber, Non-Soiling Cut-Back Rim—flushed all around, Large Water Surface, Deep Water Seal and China Bolt Caps. Vitreous China Eight-Gallon Tank, fitted with Curtin Elevated Ballcock, Curtin Flush Valve, Hard-Rubber Float, Double-Acting Capoco All-China Top Side Lever with Integral Escutcheon, 3/8" Full I. P. Size Chrome Finish Supply Pipe to Floor with Chrome Finish China Handle Stop Valve, China Floor Escutcheon and a one-piece China Straight Flush Connection. Also furnished with Supply Pipe to wall, China Handle Stop Valve and China Wall Escutcheon. Special guaranteed All-White Pyralin Finish Seat and Cover, with Concealed Hinge.

	TANK	BOWL	SEAT
Approx. wt. crated,	75 lbs.	75 lbs.	10 lbs.

For Roughing-In measurements see back of this page.

Plate 202-H — "Inaudio"

CAMDEN CLOSET COMBINATIONS

Roughing-In Measurements

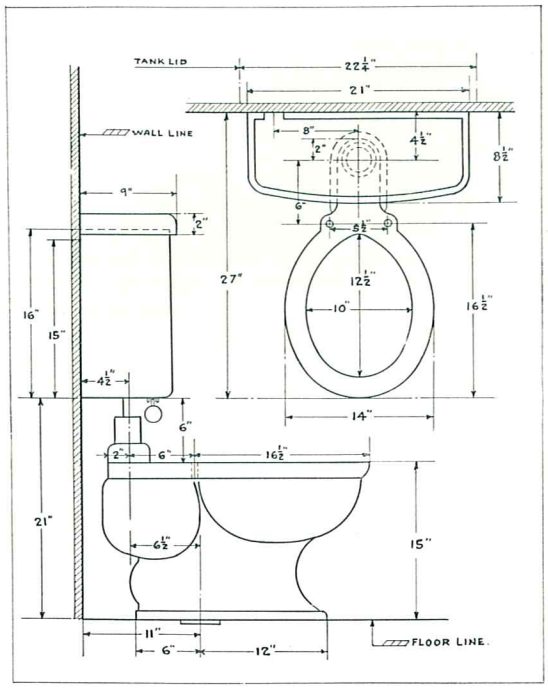

All measurements in this catalog may vary from ¼" to ½".

Plate 201-H—"Inaudio"

All measurements in this catalog may vary from ¼" to ½".

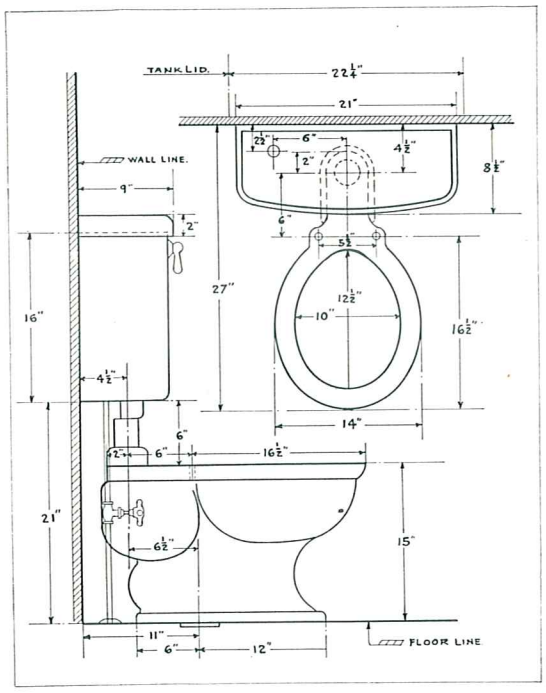

Plate 202-H—"Inaudio"

CAMDEN CLOSET COMBINATIONS

Plate 203-H — "Camelon"

Plate 203-H

"Camelon" Two-Fire Vitreous China Elongated Syphon Jet Closet with Square Pedestal Base, with Flat Rim, Large Water Surface, Deep Water Seal and Hexagon China Bolt Caps. Vitreous China Eight-Gallon Straight Front Tank, fitted with a Capoco All-China Double-Acting Top Side Lever with Hexagon Handle and Integral Escutcheon, Curtin Concealed Supply Integral Stop Ballcock, Curtin Flush Valve, Hard-Rubber Float and a one-piece Hexagon Straight China Flush Connection. Special guaranteed Elongated Seat and Lid, White Pyralin covered, with Heavy Concealed All-White Hinge.

	TANK	BOWL	SEAT
Approx. wt. crated,	85 lbs.	75 lbs.	10 lbs.

For Roughing-In measurements see back of this page.

Plate 204-H

"Camelon" Two-Fire Vitreous China Elongated Syphon Jet Closet with Square Pedestal Base, with Flat Rim, Large Water Surface, Deep Water Seal and Hexagon China Bolt Caps. Vitreous China Eight-Gallon Straight Front Tank, fitted with a Capoco All-China Double-Acting Top Side Lever with Hexagon Handle and Integral Escutcheon, Curtin Elevated Ballcock with Hard-Rubber Float, Curtin Flush Valve, 3/8" Full I. P. Size Chromium Finish Supply Pipe and Escutcheon, with Wheel Handle Chromium Finish Angle Stop and a one-piece China Straight Flush Connection. Special guaranteed Elongated Seat and Lid, White Pyralin covered, with Heavy Concealed All-White Hinge.

	TANK	BOWL	SEAT
Approx. wt. crated,	85 lbs.	75 lbs.	10 lbs.

For Roughing-In measurements see back of this page.

Plate 204-H — "Camelon"

CAMDEN CLOSET COMBINATIONS

Roughing-In Measurements

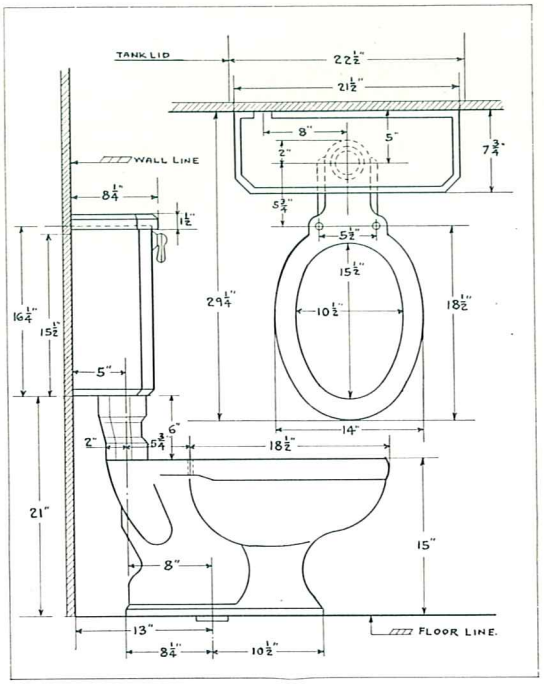

All measurements in this catalog may vary from ¼" to ½".

Plate 203-H — "Camelon"

All measurements in this catalog may vary from ¼" to ½".

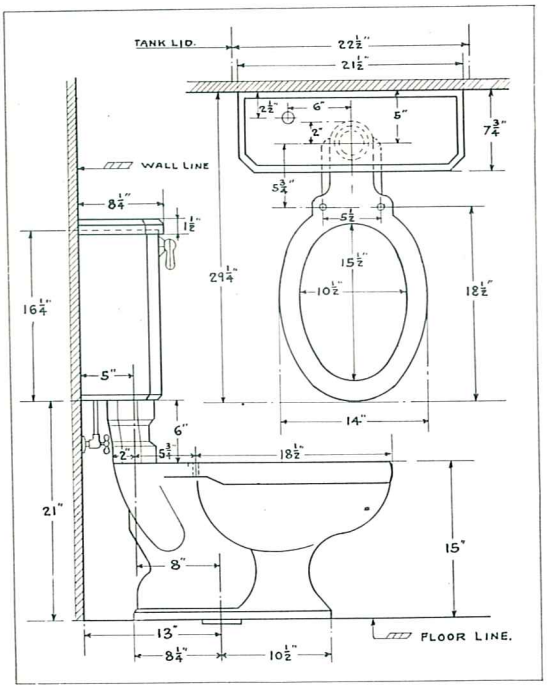

Plate 204-H — "Camelon"

CAMDEN CLOSET COMBINATIONS

Plate 205-H — "Princess"

Plate 205-H

"Princess" Two-Fire Vitreous China Square Base Syphon Jet Closet with Flat Rim, Large Water Surface, Deep Water Seal and Hexagon China Bolt Caps. Vitreous China Eight-Gallon Straight Front Tank, fitted with a Capoco All-China Double-Acting Top Side Lever with Hexagon Handle and Integral Escutcheon, Concealed Supply Integral Stop Ballcock, Douglas Type Rubber Ball Flush Valve, and a one-piece Hexagon Straight China Flush Connection. Guaranteed All-White Seat and Cover with Concealed White Hinge.

This combination can also be furnished with Straight Connection to rough-in at 11½" or with varied size Offset Connections to rough-in at 12 to 14½".

	TANK	BOWL	SEAT
Approx. wt. crated,	85 lbs.	70 lbs.	10 lbs.

For Roughing-In measurements see back of this page.

Plate 206-H

"Princess" Two-Fire Vitreous China Square Base Syphon Jet Closet with Flat Rim, Large Water Surface, Deep Water Seal and Hexagon China Bolt Caps. Vitreous China Eight-Gallon Straight Front Tank, fitted with a Capoco All-China Double-Acting Top Side Lever with Hexagon Handle and Integral Escutcheon Quiet-Acting Elevated Ballcock, Douglas Type Rubber Ball Flush Valve, ⅜" Full I. P. Size N. P. Supply Pipe to Wall with N. P. Wheel Handle Angle Stop and N. P. Escutcheon and a one-piece Hexagon Straight China Flush Connection. Guaranteed All-White Seat and Cover with Concealed White Hinge.

This combination can also be furnished with Straight Connection to rough-in at 11½" or with varied size Offset Connections to rough-in at 12 to 14½".

	TANK	BOWL	SEAT
Approx. wt. crated,	85 lbs.	70 lbs.	10 lbs.

For Roughing-In measurements see back of this page.

Plate 206-H — "Princess"

CAMDEN CLOSET COMBINATIONS

Roughing-In Measurements

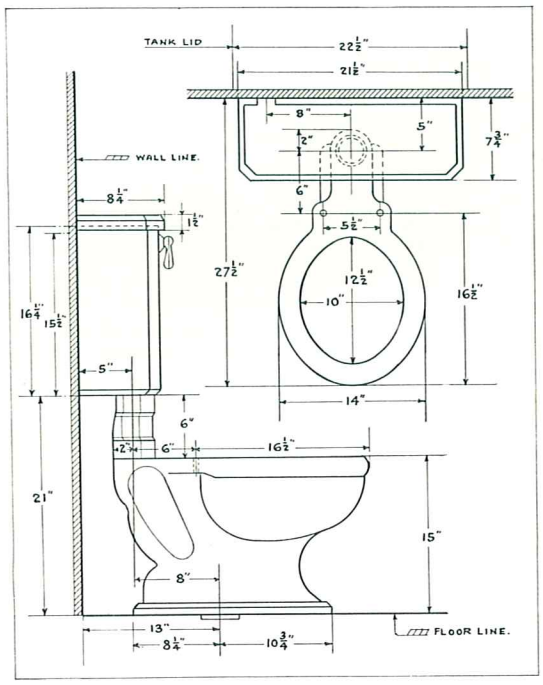

Plate 205-H—"Princess"

All measurements in this catalog may vary from ¼" to ½".

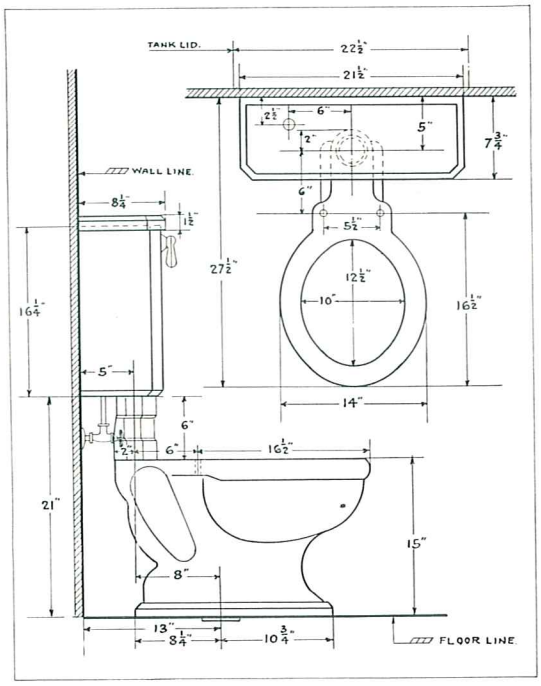

Plate 206-H—"Princess"

All measurements in this catalog may vary from ¼" to ½".

CAMDEN CLOSET COMBINATIONS

Plate 207-H — "Princess"

Plate 207-H

"Princess" Two-Fire Vitreous China Square Base Extended Lip Syphon Jet Closet with Flat Rim, Large Water Surface, Deep Water Seal and Hexagon China Bolt Caps. Vitreous China Eight-Gallon Straight Front Tank, fitted with a Capoco All-China Double-Acting Top Side Lever with Hexagon Handle and Integral Escutcheon, Concealed Supply Integral Stop Ballcock, Douglas Type Rubber Ball Flush Valve and a one-piece Hexagon Straight China Flush Connection. Guaranteed All-White Open Front Seat and Cover with Concealed White Hinge.

This combination can also be furnished with Straight Connection to rough-in at 11½" or with varied size Offset Connections to rough-in at 12 to 14½".

	TANK	BOWL	SEAT
Approx. wt. crated,	85 lbs.	75 lbs.	12 lbs.

For Roughing-In measurements see back of this page.

Plate 208-H

"Princess" Two-Fire Vitreous China Square Base Extended Lip Syphon Jet Closet with Flat Rim, Large Water Surface, Deep Water Seal and Hexagon China Bolt Caps. Vitreous China Eight-Gallon Straight Front Tank, fitted with a Capoco All-China Double-Acting Top Side Lever, with Hexagon Handle and Integral Escutcheon, Quiet-Acting Elevated Ballcock, Douglas Type Rubber Ball Flush Valve, ⅜" Full I. P. Size N. P. Supply Pipe to Wall with N. P. Angle Stop with China Handle and China Escutcheon, and a one-piece Hexagon Straight China Flush Connection. Guaranteed All-White Open Front Seat and Cover with Concealed White Hinge.

This combination can also be furnished with Straight Connection to rough-in at 11½" or with varied size Offset Connections to rough-in at 12 to 14½".

	TANK	BOWL	SEAT
Approx. wt. crated,	85 lbs.	75 lbs.	12 lbs.

For Roughing-In measurements see back of this page.

Plate 208-H — "Princess"

CAMDEN CLOSET COMBINATIONS

Roughing-In Measurements

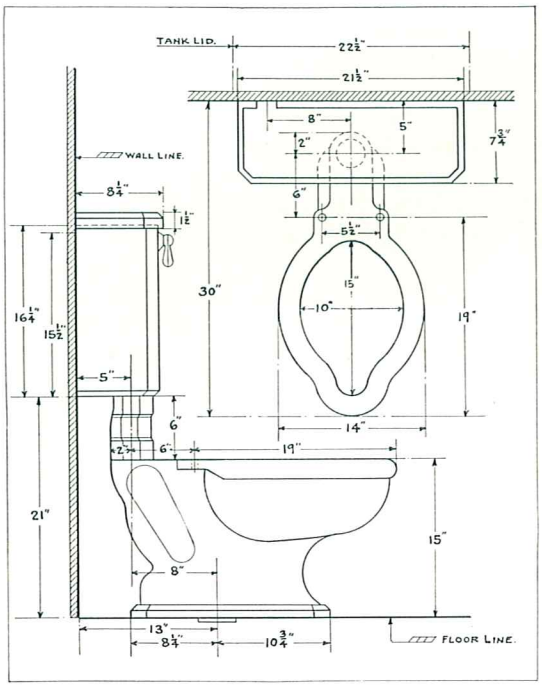

All measurements in this catalog may vary from ¼″ to ½″.

Plate 207-H — "Princess"

All measurements in this catalog may vary from ¼″ to ½″.

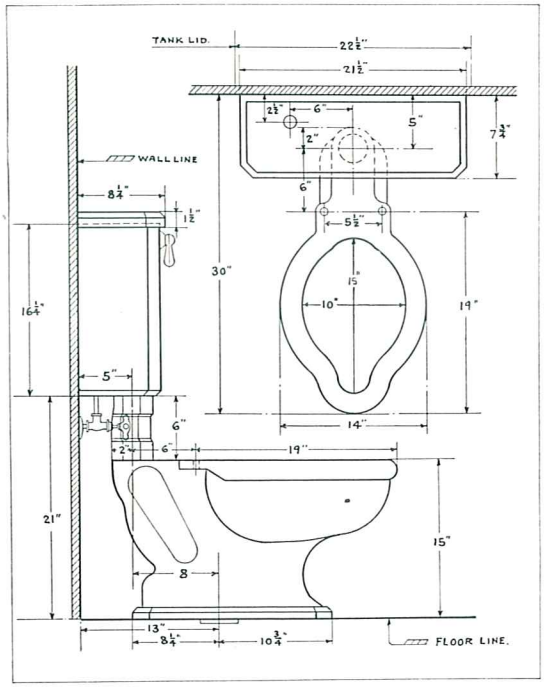

Plate 208-H — "Princess"

CAMDEN CLOSET COMBINATIONS

Plate 209-H — "Princess"

Plate 209-H

"Princess" Two-Fire Vitreous China Square Base Syphon Jet Closet with Flat Rim, Large Water Surface, Deep Water Seal and Hexagon China Bolt Caps. Vitreous China Eight-Gallon Straight Front Tank, fitted with N. P. Double-Acting Bottom Lever with China Handle, Concealed Supply Integral Stop Ballcock, Douglass Type Rubber Ball Flush Valve and a one-piece Hexagon Straight China Flush Connection. Guaranteed All-White Seat and Cover with Concealed White Hinge.

	TANK	BOWL	SEAT
Approx. wt. crated,	85 lbs.	70 lbs.	10 lbs.

For Roughing-In measurements see back of this page.

Plate 210-H

"Campus" Two-Fire Vitreous China Oval Base Syphon Jet Closet, Oval Rim, Large Water Surface, Deep Water Seal and Plain Round China Bolt Caps. Vitreous China Eight-Gallon Curved Front Tank, fitted with a Capoco All-China Double-Acting Top Side Lever with Integral Escutcheon, Quiet-Acting Elevated Ballcock, Douglass Type Rubber Ball Flush Valve, 3/8" Full I. P. Size N. P. Supply Pipe to wall with N. P. Wheel Handle Angle Stop and N. P. Escutcheon. A one-piece Plain China Offset Flush Connection. Guaranteed White Seat and Cover with Heavy N. P. Hinge.

	TANK	BOWL	SEAT
Approx. wt. crated,	75 lbs.	65 lbs.	10 lbs.

For Roughing-In measurements see back of this page.

Plate 210-H — "Campus"

CAMDEN CLOSET COMBINATIONS

Roughing-In Measurements

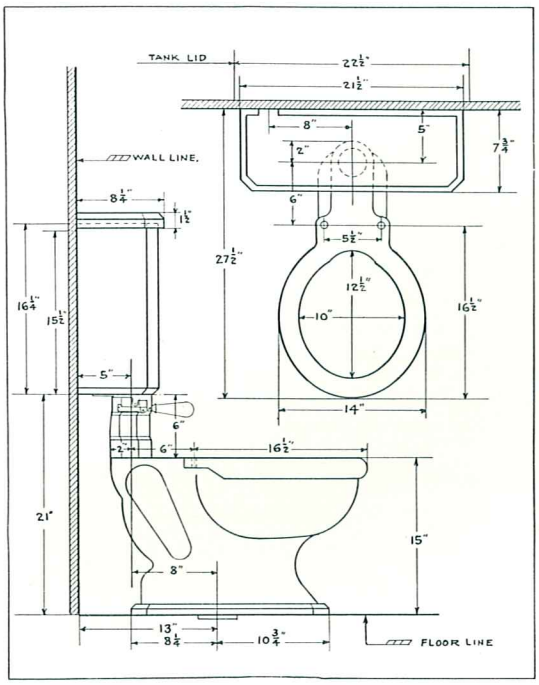

Plate 209-H — "Princess"

All measurements in this catalog may vary from ¼" to ½".

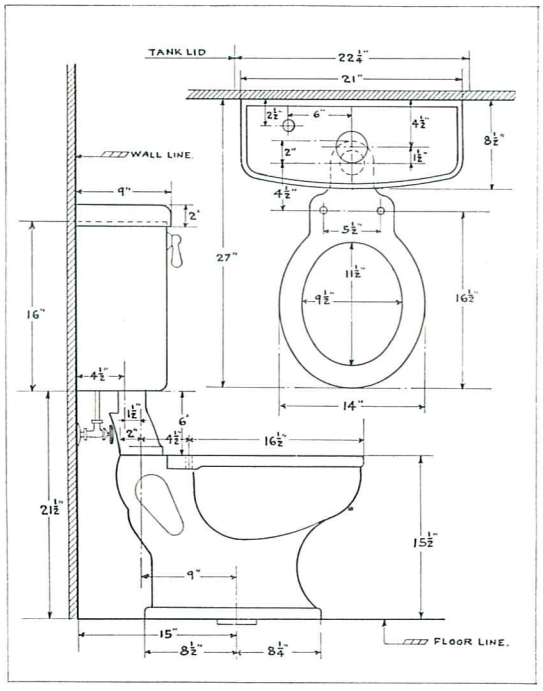

Plate 210-H — "Campus"

All measurements in this catalog may vary from ¼" to ½".

CAMDEN CLOSET COMBINATIONS

Plate 211-H — "Colby"

Plate 211-H

"Colby" Two-Fire Vitreous China Wall Outlet Syphon Jet Closet with Oval Base, Oval Rim, Large Water Surface, Deep Water Seal and Plain Round China Bolt Caps. Vitreous China Eight-Gallon Curved Front Tank, fitted with a Capoco All-China Double-Acting Top Side Lever with Integral Escutcheon, Concealed Supply Integral Stop Ballcock, Douglass Type Rubber Ball Flush Valve and a one-piece Plain China Straight Flush Connection. Guaranteed All-White Seat and Cover with Concealed White Hinge.

	TANK	BOWL	SEAT
Approx. wt. crated,	80 lbs.	75 lbs.	10 lbs.

For Roughing-In measurements see back of this page.

Plate 212-H

"Carlow" Two-Fire Vitreous China Integral Seat Syphon Jet Closet with Oval Base, Large Water Surface, Deep Water Seal and Plain Round China Bolt Caps. Vitreous China Eight-Gallon Curved Front Tank, fitted with a Capoco All-China Double-Acting Top Side Lever with Integral Escutcheon, Quiet-Acting Elevated Ballcock, Douglass Type Rubber Ball Flush Valve, 3/8" Full I. P. Size N. P. Supply Pipe to wall with N. P. Wheel Handle Angle Stop and N. P. Escutcheon. A one-piece Plain China Straight Flush Connection.

	TANK	BOWL
Approximate weight, crated,	80 lbs.	70 lbs.

For Roughing-In measurements see back of this page.

Plate 212-H — "Carlow"

CAMDEN CLOSET COMBINATIONS

Roughing-In Measurements

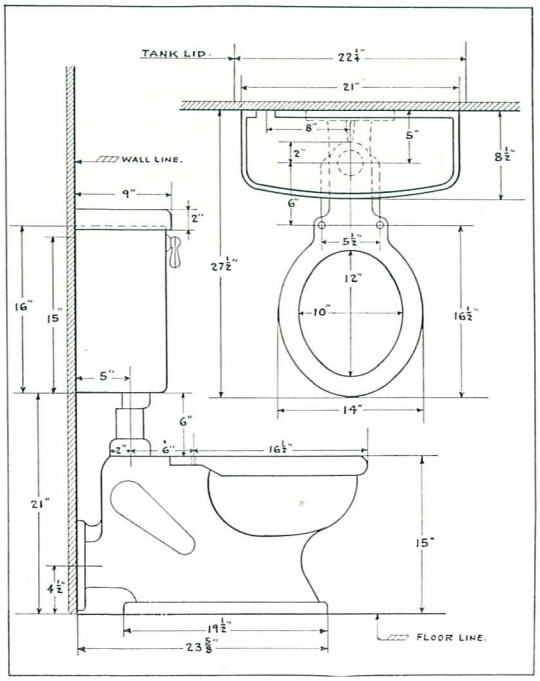

All measurements in this catalog may vary from ¼" to ½".

Plate 211-H — "Colby"

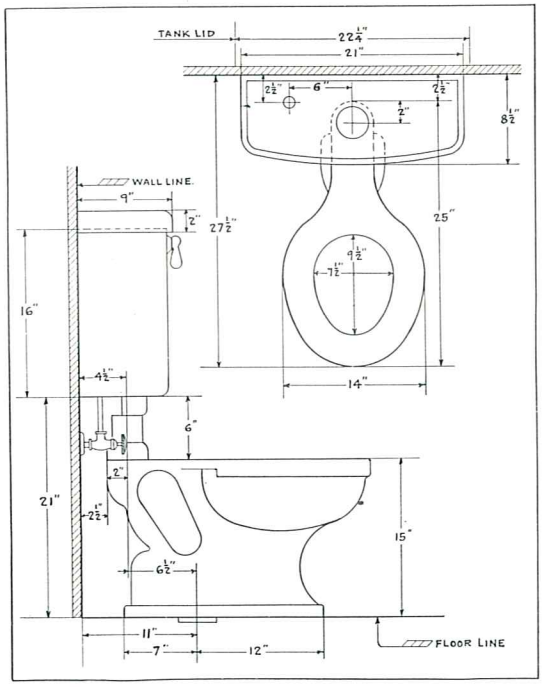

All measurements in this catalog may vary from ¼" to ½".

Plate 212-H — "Carlow"

CAMDEN CLOSET COMBINATIONS

Plate 220-H—"Croton"

Plate 220-H

"Croton" Two-Fire Vitreous China Reverse Trap Closet with Square Base, Flat Rim, Large Water Surface, Deep Water Seal and Hexagon China Bolt Caps. Vitreous China Seven-Gallon Straight Front Tank, fitted with a Capoco All-China Double-Acting Top Side Lever with Hexagon Handle and Integral Escutcheon, Quiet-Acting Elevated Ballcock, Douglass Type Rubber Ball Flush Valve, 3/8" Full I. P. Size N. P. Supply Pipe to Wall with N. P. Wheel Handle Angle Stop, N. P. Escutcheon and a White-Enameled Flush Elbow with Two White-Enameled Escutcheons. Guaranteed White Seat and Cover with Heavy N. P. Hinge.

Plate 221-H same as above except for 14" Roughing.

	TANK	BOWL	SEAT
Approx. wt. crated,	70 lbs.	55 lbs.	10 lbs.

For Roughing-In measurements see back of this page.

Plate 222-H

"Croton" Two-Fire Vitreous China Reverse Trap Closet with Extended Lip, Square Base, Flat Rim, Large Water Surface, Deep Water Seal and Hexagon China Bolt Caps. Vitreous China Seven-Gallon Straight Front Tank, fitted with a Capoco All-China Double-Acting Top Side Lever with Hexagon Handle and Integral Escutcheon, Quiet-Acting Elevated Ballcock, Douglass Type Rubber Ball Flush Valve, 3/8" Full I. P. Size N. P. Supply Pipe to Wall with N. P. Wheel Handle Angle Stop, N. P. Escutcheon and a White-Enameled Flush Elbow with Two White-Enameled Escutcheons. Guaranteed Open Front Seat and Cover, Mahogany Finish, with Heavy N. P. Hinge.

Plate 223-H same as above except for 14" Roughing.

	TANK	BOWL	SEAT
Approx. wt. crated,	70 lbs.	60 lbs.	12 lbs.

For Roughing-In measurements see back of this page.

Plate 222-H—"Croton"

CAMDEN CLOSET COMBINATIONS

Roughing-In Measurements

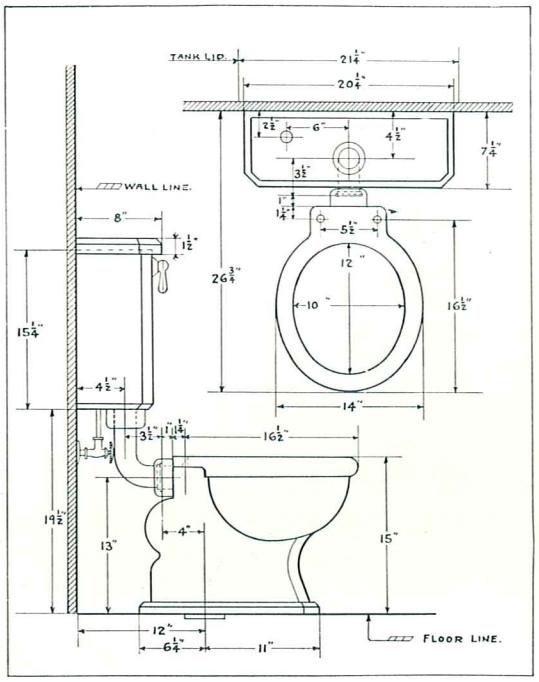

All measurements in this catalog may vary from ¼″ to ½″.

Plate 220-H — "Croton"

All measurements in this catalog may vary from ¼″ to ½″.

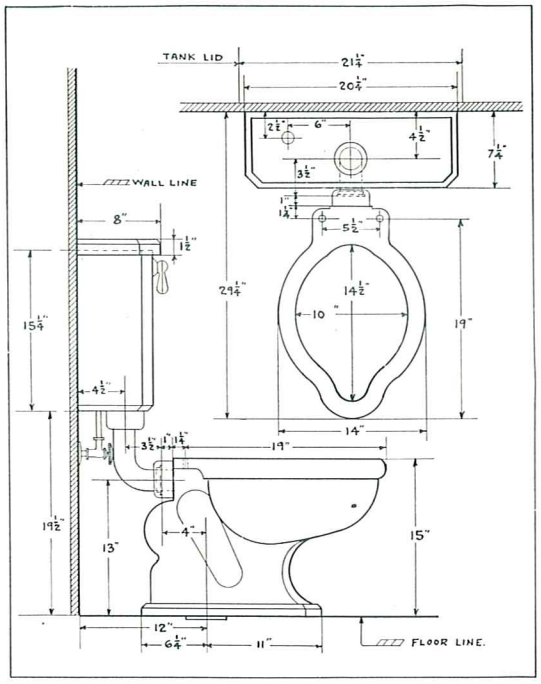

Plate 222-H — "Croton"

CAMDEN CLOSET COMBINATIONS

Plate 230-H — "Latona"

Plate 230-H

"Latona" Two-Fire Vitreous China Syphon Action Washdown Closet, Square Base, Flat Rim, Large Water Surface, Deep Water Seal and Hexagon China Bolt Caps. Vitreous China Seven-Gallon Straight Front Tank, fitted with a Capoco All-China Double-Acting Top Side Lever with Hexagon Handle and Integral Escutcheon, Quiet-Acting Elevated Ballcock, Douglass Type Rubber Ball Flush Valve, 3/8" Full I. P. Size N. P. Supply Pipe to floor, with N. P. Escutcheon and N. P. Flush Elbow with N. P. Cast Brass Nuts. Guaranteed Mahogany or Oak Finish Seat and Cover with Heavy N. P. Hinge.

Plate 231-H same as above except for 12" Roughing.

	TANK	BOWL	SEAT
Approx. wt. crated,	70 lbs.	55 lbs.	10 lbs.

For Roughing-In measurements see back of this page.

Plate 232-H

"Colwick" Two-Fire Vitreous China Syphon Action Washdown Closet, Square Base, Flat Rim, Large Water Surface, Deep Water Seal and Hexagon China Bolt Caps. Vitreous China Seven-Gallon Curved Front Tank, fitted with a Capoco All-China Double-Acting Top Side Lever with Integral Escutcheon, Quiet-Acting Elevated Ballcock, Douglass Type Rubber Ball Flush Valve, 3/8" Full I. P. Size N. P. Supply Pipe to floor with N. P. Escutcheon and N. P. Flush Elbow with N. P. Cast Brass Nuts. Guaranteed Mahogany or Oak Finish Seat and Cover with Heavy N. P. Hinge.

	TANK	BOWL	SEAT
Approx. wt. crated,	70 lbs.	55 lbs.	10 lbs.

For Roughing-In measurements see back of this page.

Plate 232-H — "Colwick"

CAMDEN CLOSET COMBINATIONS

Roughing-In Measurements

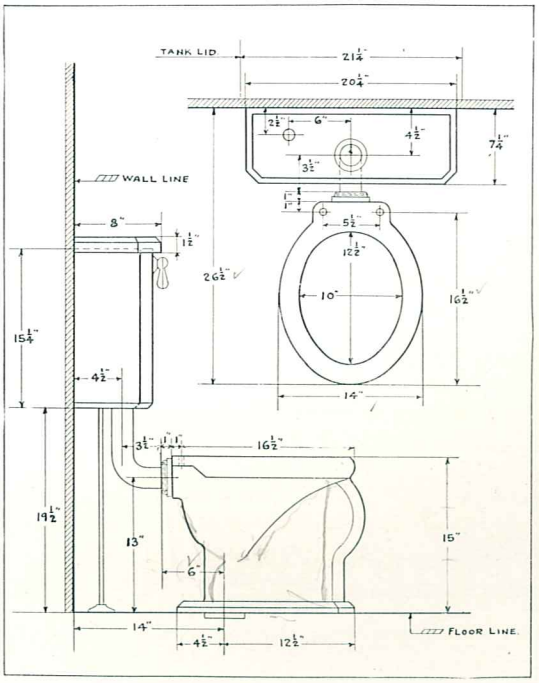

All measurements in this catalog may vary from ¼″ to ½″.

Plate 230-H — "Latona"

All measurements in this catalog may vary from ¼″ to ½″.

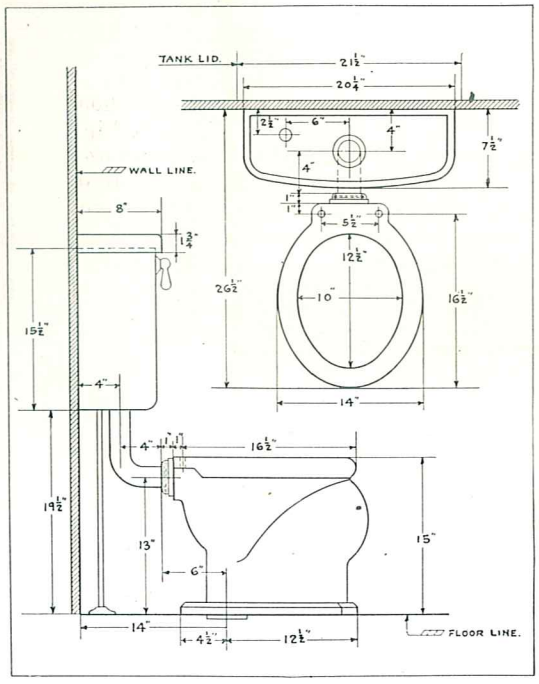

Plate 232-H — "Colwick"

CAMDEN CLOSET COMBINATIONS

Plate 233-H — "Colbert"

Plate 233-H

"Colbert" Two-Fire Vitreous China Syphon Action Washdown Closet, Square Base, Flat Rim, Large Water Surface, Deep Water Seal and Hexagon China Bolt Caps. Vitreous China Seven-Gallon Straight Front Tank, fitted with a Capoco All-China Double-Acting Top Side Lever with Hexagon Handle and Integral Escutcheon, Quiet-Acting Elevated Ballcock, Douglass Type Rubber Ball Flush Valve, 3/8" Full I. P. Size N. P. Supply Pipe to wall with N. P. Wheel Handle Angle Stop, N. P. Escutcheon and a White-Enameled Flush Elbow with Two White-Enameled Escutcheons. Guaranteed White Seat and Cover with Heavy N. P. Hinge.

	TANK	BOWL	SEAT
Approx. wt. crated,	70 lbs.	55 lbs.	10 lbs.

For Roughing-In measurements see back of this page.

Plate 234-H

"Colbert" Two-Fire Vitreous China Syphon Action Washdown Closet with Extended Lip, Square Base, Flat Rim, Large Water Surface, Deep Water Seal and Hexagon China Bolt Caps. Vitreous China Seven-Gallon Straight Front Tank, fitted with a Capoco All-China Double-Acting Top Side Lever with Hexagon Handle and Integral Escutcheon, Quiet-Acting Elevated Ballcock, Douglass Type Rubber Ball Flush Valve, 3/8" Full I. P. Size N. P. Supply Pipe to floor with N. P. Wheel Handle Straight Stop, N. P. Escutcheon and N. P. Flush Elbow with N. P. Cast Brass Nuts. Guaranteed Open Front Seat and Cover, Mahogany Finish with Heavy N. P. Hinge.

	TANK	BOWL	SEAT
Approx. wt. crated,	70 lbs.	60 lbs.	10 lbs.

For Roughing-In measurements see back of this page.

Plate 234-H — "Colbert"

CAMDEN CLOSET COMBINATIONS

Roughing-In Measurements

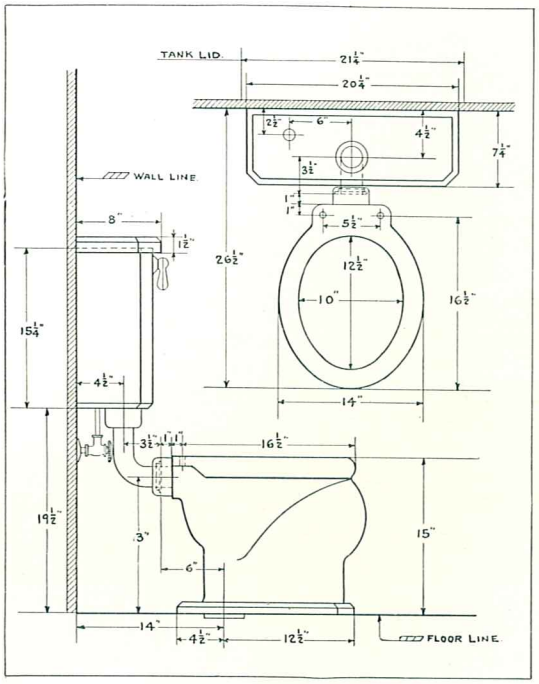

Plate 233-H — "Colbert"

All measurements in this catalog may vary from ¼" to ½".

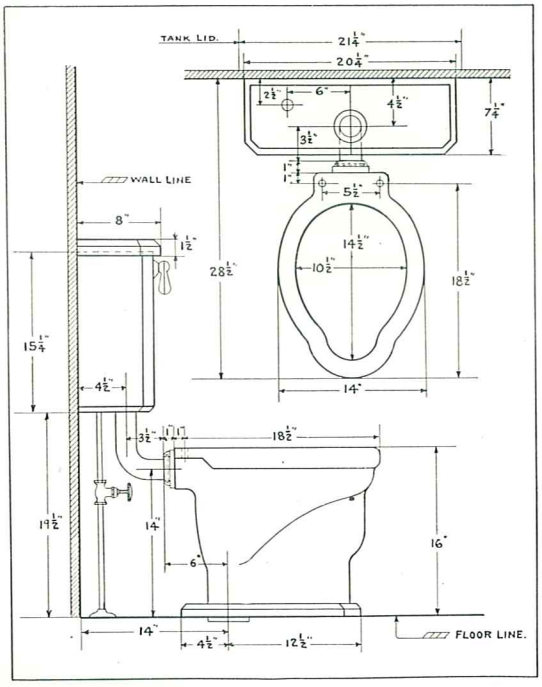

Plate 234-H — "Colbert"

All measurements in this catalog may vary from ¼" to ½".

CAMDEN
VALVE COMBINATIONS

FLUSH VALVE
COMBINATIONS

FLUSH VALVE
COMBINATIONS

"Capoco"

CAMDEN VALVE COMBINATIONS

Plate 301-H — "Camelon"

Plate 301-H

"Camelon" Two-Fire Vitreous China Elongated Syphon Jet Closet with Square Pedestal Base, Flat Rim, Large Water Surface, Deep Water Seal and Hexagon China Bolt Caps, fitted with N. P. Flush Valve with China Oscillating Handle, N. P. Angle Stop with N. P. Wall and Spud Flanges. Guaranteed Hard-Rubber Seat, Open Front and Back with Moulded Rubber Covered Cast Brass Hinge.

This Bowl can also be furnished Juvenile Height (13″ high).

	BOWL	VALVE	SEAT
Approx. wt. crated,	75 lbs.	8 lbs.	5 lbs.

For Roughing-In measurements see back of this page.

Plate 302-H

"Princess" Two-Fire Vitreous China Square Base Syphon Jet Closet, Flat Rim, Large Water Surface, Deep Water Seal and Hexagon China Bolt Caps, fitted with N. P. Flush Valve with China Oscillating Handle, N. P. Angle Stop with N. P. Wall and Spud Flanges. Guaranteed All-White Seat and Cover with Concealed White Hinge.

This Bowl can also be furnished Juvenile Height (13″ high).

	BOWL	VALVE	SEAT
Approx. wt. crated,	70 lbs.	8 lbs.	10 lbs.

For Roughing-In measurements see back of this page.

Plate 302-H — "Princess"

CAMDEN VALVE COMBINATIONS

Roughing-In Measurements

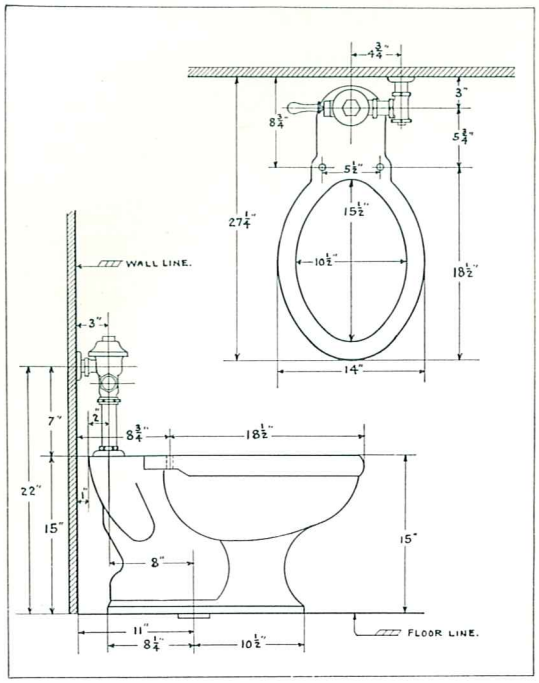

Plate 301-H — "Camelon"

All measurements in this catalog may vary from ¼" to ½".

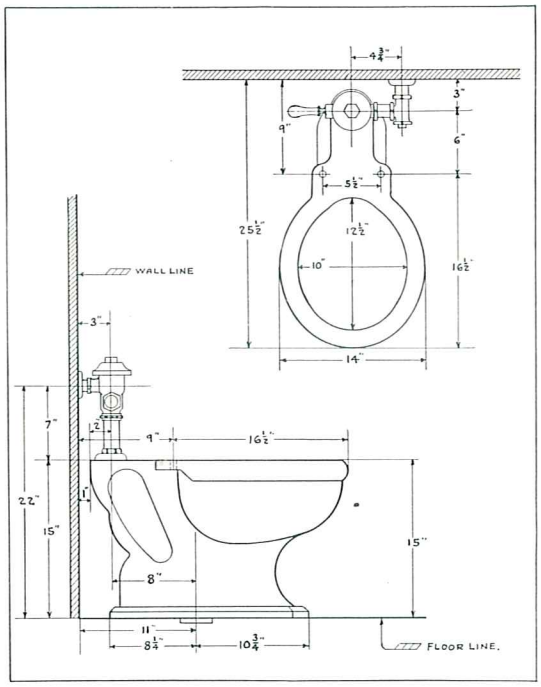

Plate 302-H — "Princess"

All measurements in this catalog may vary from ¼" to ½".

CAMDEN VALVE COMBINATIONS

Plate 303-H — "Princess"

Plate 303-H

"Princess" Two-Fire Vitreous China Square Base Syphon Jet Closet with Extended Lip, Flat Rim, Large Water Surface, Deep Water Seal and Hexagon China Bolt Caps, fitted with N. P. Flush Valve with China Oscillating Handle, N. P. Angle Stop with N. P. Wall and Spud Flanges. Guaranteed Hard-Rubber Seat, Open Front and Back with Moulded Rubber-Covered Cast Brass Hinge.

This Bowl can also be furnished in Juvenile Height (13″ high).

	BOWL	VALVE	SEAT
Approx. wt. crated,	75 lbs.	8 lbs.	5 lbs.

For Roughing-In measurements see back of this page.

Plate 304-H

"Princess" Two-Fire Vitreous China Square Base Syphon Jet Closet with Side Inlet, Flat Rim, Large Water Surface, Deep Water Seal and Hexagon China Bolt Caps, fitted with N. P. Flush Valve with China Oscillating Handle, N. P. Straight Stop with N. P. Wall and Spud Flanges. Guaranteed Hard-Rubber Seat, Open Front, with Heavy N. P. Cast Brass Bar Hinge.

This Bowl can also be furnished in Juvenile Height (13″ high) with or without Extended Lip.

	BOWL	VALVE	SEAT
Approx. wt. crated,	70 lbs.	8 lbs.	5 lbs.

For Roughing-In measurements see back of this page.

Plate 304-H — "Princess"

CAMDEN VALVE COMBINATIONS

Roughing-In Measurements

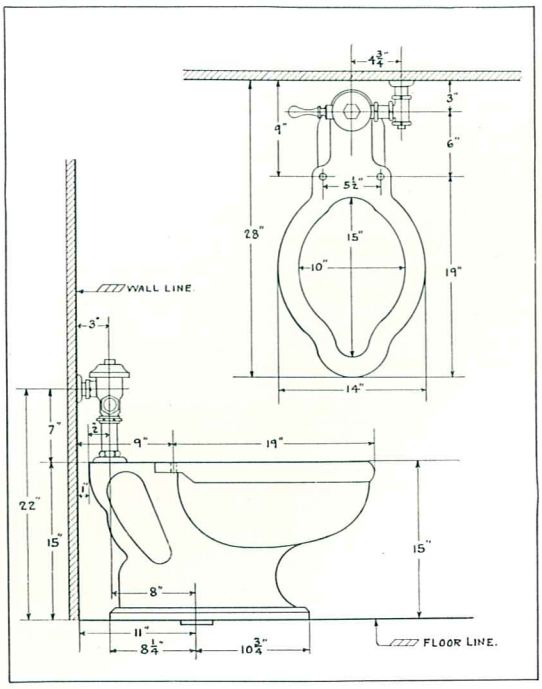

All measurements in this catalog may vary from ¼″ to ½″.

Plate 303-H — "Princess"

All measurements in this catalog may vary from ¼″ to ½″.

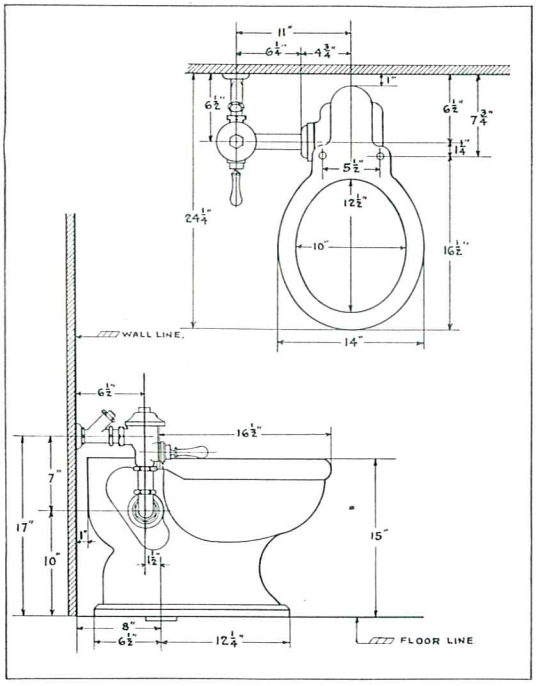

Plate 304-H — "Princess"

CAMDEN VALVE COMBINATIONS

Plate 305-H—"Cabot"

Plate 305-H

"Cabot" Two-Fire Vitreous China Syphon Jet Closet with Round Raised Rear Vent and China Vent Flange, Oval Base, Oval Rim, Large Water Surface, Deep Water Seal and Round China Bolt Caps, fitted with N. P. Flush Valve with China Oscillating Handle, N. P. Angle Stop with N. P. Wall and Spud Flanges. Guaranteed Hard-Rubber Seat, Open Front with Heavy N. P. Cast Brass Bar Hinge.

Plate 306-H same as above except with Extended Lip.

This Bowl can also be furnished in Juvenile Height (13″ high) with or without Extended Lip.

	BOWL	VALVE	SEAT
Approx. wt. crated,	80 lbs.	8 lbs.	5 lbs.

For Roughing-In measurements see back of this page.

Plate 307-H

"Croton" Two-Fire Vitreous China Reverse Trap Closet with Square Base, Flat Rim, Large Water Surface, Deep Water Seal and Hexagon China Bolt Caps, fitted with N. P. Flush Valve with China Oscillating Handle, N. P. Angle Stop with N. P. Wall and Spud Flanges. Guaranteed Hard-Rubber Seat, Open Front with Heavy N. P. Cast Brass Bar Hinge.

	BOWL	VALVE	SEAT
Approx. wt. crated,	55 lbs.	8 lbs.	5 lbs.

For Roughing-In measurements see back of this page.

Plate 307-H—"Croton"

CAMDEN VALVE COMBINATIONS

Roughing-In Measurements

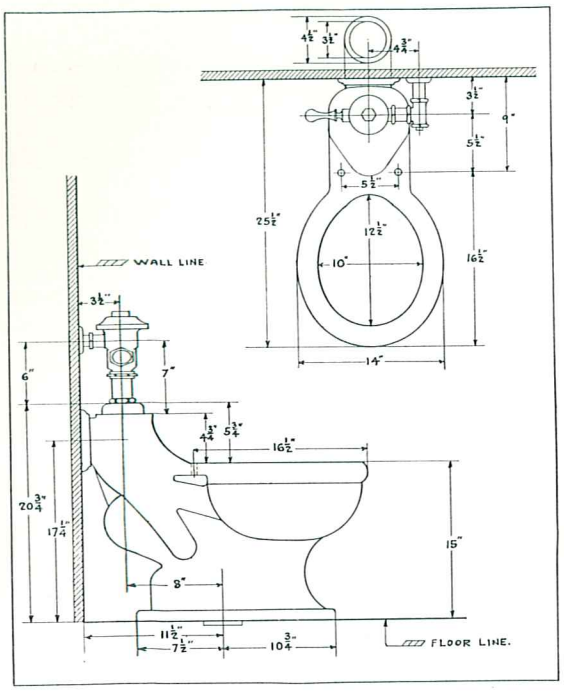

All measurements in this catalog may vary from ¼″ to ½″.

Plate 305-H — "Cabot"

All measurements in this catalog may vary from ¼″ to ½″.

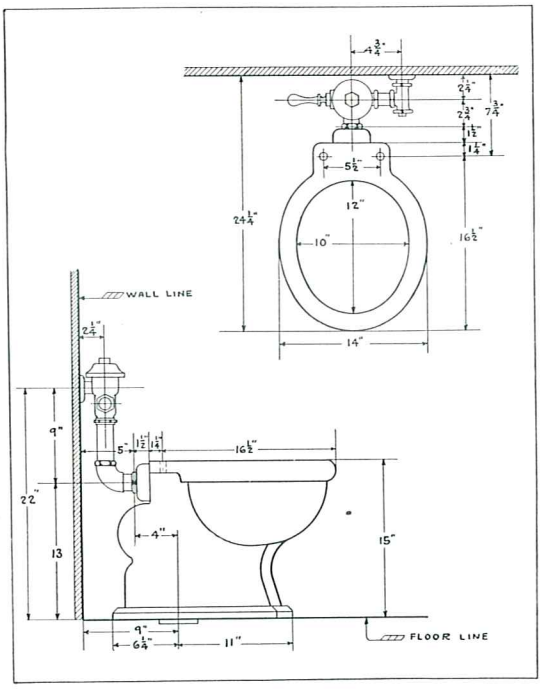

Plate 307-H — "Croton"

CAMDEN VALVE COMBINATIONS

Plate 308-H—"Croton"

Plate 308-H

"Croton" Two-Fire Vitreous China Reverse Trap Closet with Extended Lip, Square Base, Flat Rim, Large Water Surface, Deep Water Seal and Hexagon China Bolt Caps, fitted with N. P. Flush Valve with China Oscillating Handle, N. P. Angle Stop with N. P. Wall and Spud Flanges. Guaranteed Hard-Rubber Seat, Open Front and Back, with Moulded Rubber-Covered Cast Brass Hinge.

	BOWL	VALVE	SEAT
Approx. wt. crated,	60 lbs.	8 lbs.	5 lbs.

For Roughing-In measurements see back of this page.

Plate 309-H

"Croton" Two-Fire Vitreous China Reverse Trap Closet, Side Inlet with Extended Lip, Square Base, Flat Rim, Large Water Surface, Deep Water Seal and Hexagon China Bolt Caps, fitted with N. P. Flush Valve with China Oscillating Handle, N. P. Straight Stop with N. P. Wall and Spud Flanges. Guaranteed Hard-Rubber Seat, Open Front and Back, with Moulded Rubber-Covered Cast Brass Hinge.

	BOWL	VALVE	SEAT
Approx. wt. crated,	60 lbs.	8 lbs.	5 lbs.

For Roughing-In measurements see back of this page.

Plate 309-H—"Croton"

CAMDEN VALVE COMBINATIONS

Roughing-In Measurements

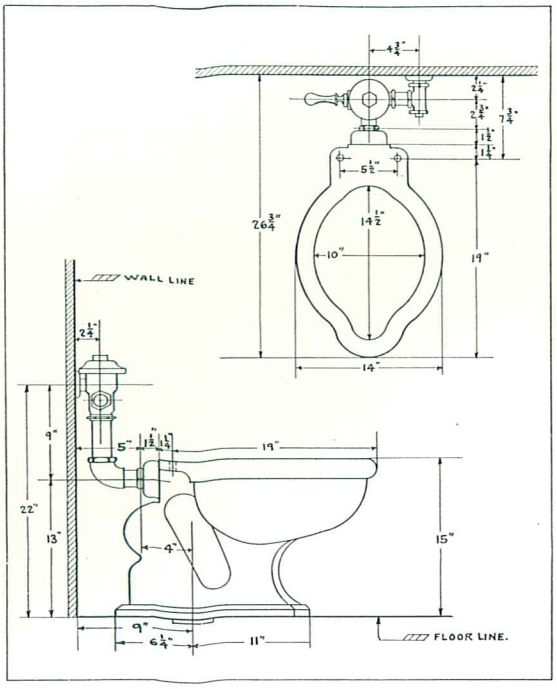

All measurements in this catalog may vary from ¼″ to ½″.

Plate 308-H—"Croton"

All measurements in this catalog may vary from ¼″ to ½″.

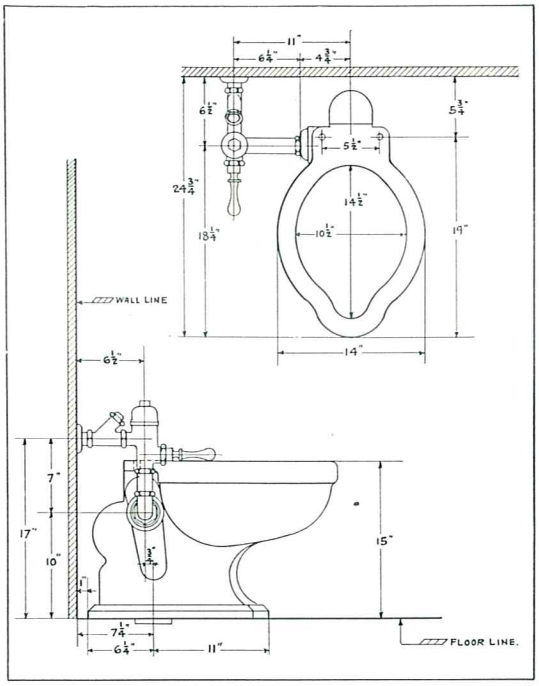

Plate 309-H—"Croton"

CAMDEN VALVE COMBINATIONS

Plate 310-H—"Latona"

Plate 310-H

"Latona" Two-Fire Vitreous China Syphon Action Washdown Closet, Square Base, Flat Rim, Large Water Surface, Deep Water Seal and Hexagon China Bolt Caps, fitted with N. P. Flush Valve with China Oscillating Handle, N. P. Angle Stop with N. P. Wall and Spud Flanges. Guaranteed Open Front Seat, Mahogany Finish, with Heavy N. P. Cast Brass Bar Hinge.

	BOWL	VALVE	SEAT
Approx. wt. crated,	55 lbs.	8 lbs.	5 lbs.

For Roughing-In measurements see back of this page.

Plate 311-H

"Colwick" Two-Fire Vitreous China Syphon Action Washdown Closet with Extended Lip, Square Base, Flat Rim, Large Water Surface, Deep Water Seal and Hexagon China Bolt Caps, fitted with N. P. Flush Valve with China Oscillating Handle, N. P. Angle Stop with N. P. Wall and Spud Flanges. Guaranteed Open Front Seat, Mahogany Finish, with Heavy N. P. Cast Brass Bar Hinge.

	BOWL	VALVE	SEAT
Approx. wt. crated,	55 lbs.	8 lbs.	5 lbs.

For Roughing-In measurements see back of this page.

Plate 311-H—"Colwick"

CAMDEN VALVE COMBINATIONS

Roughing-In Measurements

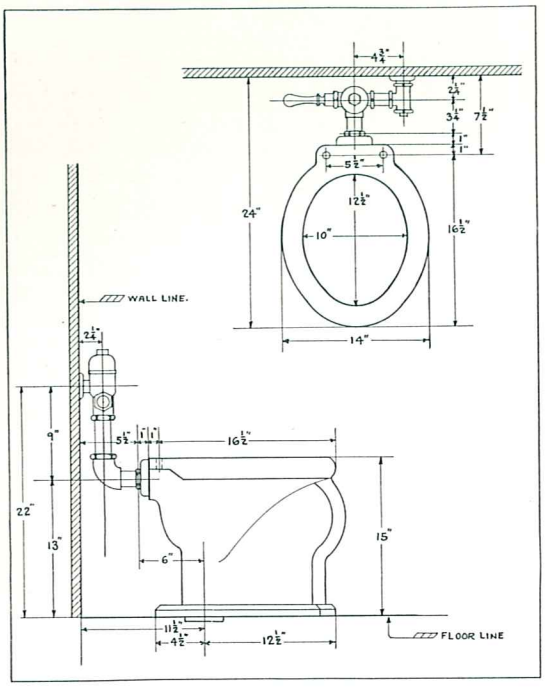

All measurements in this catalog may vary from ¼″ to ½″.

Plate 310-H—"Latona"

All measurements in this catalog may vary from ¼″ to ½″.

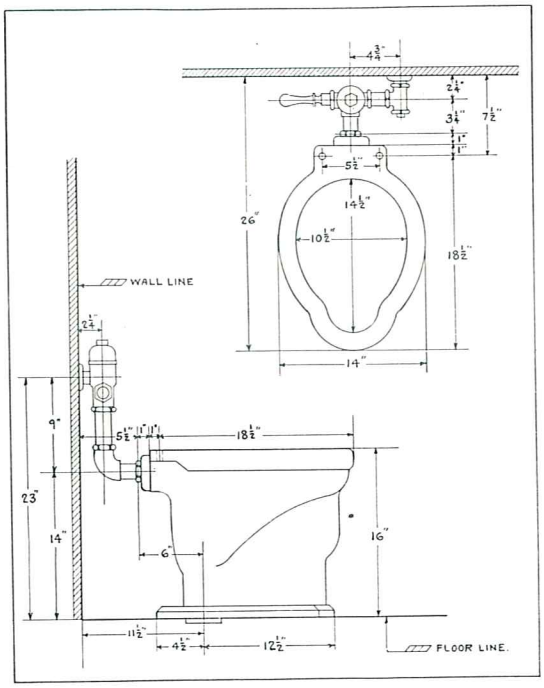

Plate 311-H—"Colwick"

CAMDEN VALVE COMBINATIONS

Plate 312-H—"Latona"

Plate 312-H

"Latona" Two-Fire Vitreous China Syphon Action Washdown Closet with Side Inlet, Square Base, Flat Rim, Large Water Surface, Deep Water Seal and Hexagon China Bolt Caps, fitted with N. P. Flush Valve with China Oscillating Handle, N. P. Straight Stop with N. P. Wall and Spud Flanges. Guaranteed Open Front Seat, Mahogany Finish, with Heavy N. P. Cast Brass Bar Hinge.

	BOWL	VALVE	SEAT
Approx. wt. crated,	55 lbs.	8 lbs.	5 lbs.

For Roughing-In measurements see back of this page.

Plate 313-H

"Cambridge" Two-Fire Vitreous China Syphon Action Washdown Closet with Round Raised Rear Vent and China Vent Flange, Oval Base, Oval Rim, Large Water Surface, Deep Water Seal and Round China Bolt Caps, fitted with N. P. Flush Valve with China Oscillating Handle, N. P. Angle Stop with N. P. Wall and Spud Flanges. Guaranteed Hard-Rubber Seat, Open Front, with Heavy N. P. Cast Brass Bar Hinge.

Plate 314-H same as above except with Extended Lip.

This Bowl can also be furnished in Juvenile Height (13″ high) with or without Extended Lip.

	BOWL	VALVE	SEAT
Approx. wt. crated,	75 lbs.	8 lbs.	5 lbs.

For Roughing-In measurements see back of this page.

Plate 313-H—"Cambridge"

CAMDEN VALVE COMBINATIONS

Roughing-In Measurements

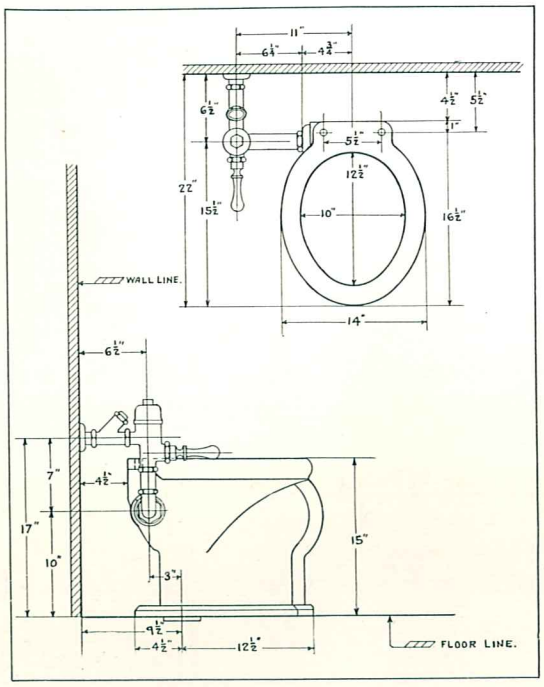

All measurements in this catalog may vary from ¼″ to ½″.

Plate 312-H—"Latona"

All measurements in this catalog may vary from ¼″ to ½″.

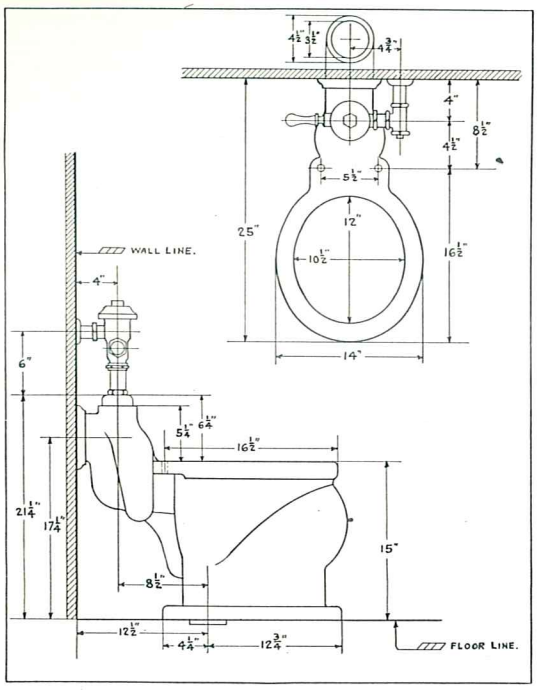

Plate 313-H—"Cambridge"

CAMDEN
WATER CLOSET BOWLS
AND TANKS

CLOSET BOWLS
AND TANKS

"Capoco"

CLOSET BOWLS
AND TANKS

CAMDEN WATER CLOSET BOWLS

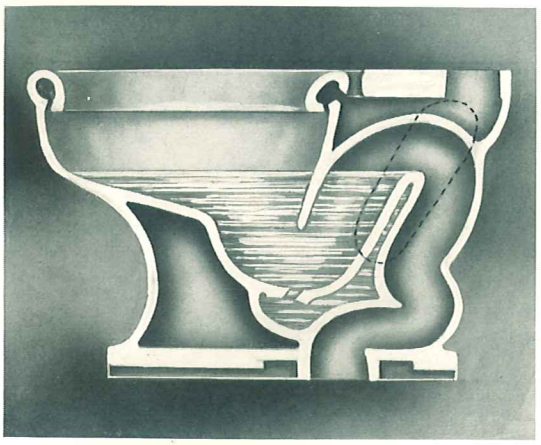

Cross Section "Camden" Syphon Jet Closet Bowl

"Camden" Two-Fire Vitreous China Syphon Jet Closets

Are attractive in design and constructed with the latest sanitary features. Note the large opening in bowl, deep seal, twin jets, extended water surface and large passageway, which make the syphon jet closet more positive, efficient and quieter in operation than either the reverse trap or the wash down.

"Camden" Two-Fire Vitreous China Reverse Trap Closets

Are somewhat similar in design to the syphon jet, and while lower in cost, the same care in construction has been followed, resulting in a maximum water surface and as deep a seal as is practical for the efficient operation of a closet of this type. This bowl can be furnished with or without jet and has a quick and positive action.

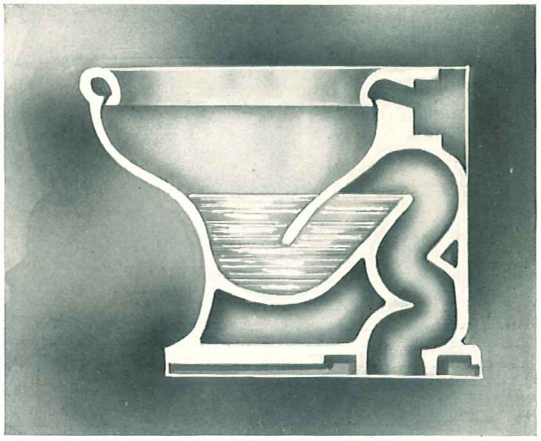

Cross Section "Camden" Reverse Trap Closet Bowl

Cross Section "Camden" Washdown Closet Bowl

"Camden" Two-Fire Vitreous China Washdown Closets

Are made with and without jet, attractive in appearance and contain many sanitary features, such as large opening in bowl, maximum water surface, deep seal and large opening through trap. A bowl which will give long and efficient service and is recommended where economy is desired.

C. W. MOORE SELF-TESTING WATER-SEAL FLOOR FLANGE

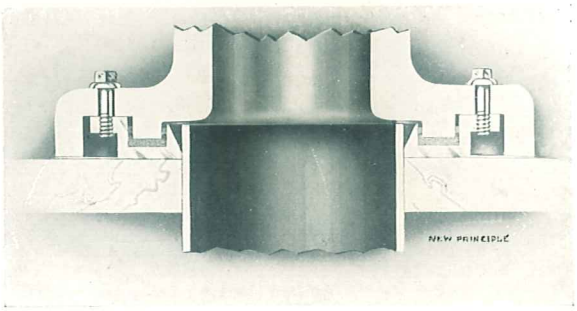

Fig. 1. Shows a central vertical cross section through the bolt-holes of the discharge end of an earthenware Water Closet and the New Principle Foot and Self-Testing Water-Seal Floor Flange.

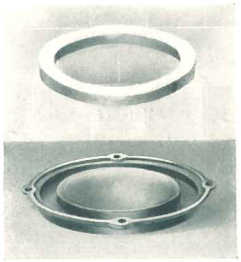

Fig. 2. Shows the New Principle Self-Testing Water-Seal Floor Flange for lead bends.

The object of the New Principle Water Closet Foot and Self-Testing Water-Seal Floor Flange is to provide a better outlet connection for water closets than has heretofore been used, by *trapping the discharge* end in a manner to make an absolutely perfect and permanent sewer-gas tight joint under all conditions, and to eliminate the unsanitary putty joint connection, which is the most unsanitary thing in the entire plumbing system.

Fig. 3. Shows the New Principle Self-Testing Water-Seal Floor Flange for cast iron bends.

One of the chief features of the New Principle Floor Flange is that it secures a perfect hygienic condition.

It has four distinct seals: 1 Water, 1 Pressure and 2 Grease.

If for any reason the *Water Closet should become loose, the water retained in the Water-Seal immediately shows itself on the floor*, the only thing necessary, is to tighten the bolts.

See that all Water Closets are marked—

MOORE SELF-TESTING

Patented Feb. 10, 1929; other patents pending.

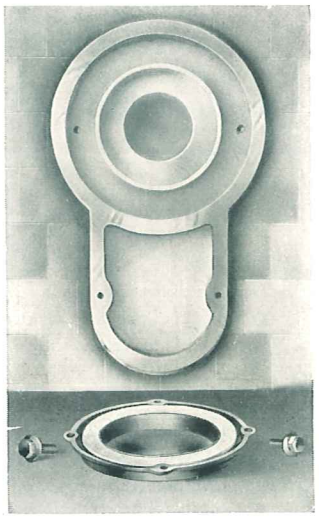

Fig. 4. Shows the New Principle Floor Flange set complete with the greased felt gasket set in recess, also Closet ready to set in place.

The New Principle Self-Testing Water-Seal Flange simplifies the setting of the bowl.

See that all Water Closets are marked—

MOORE SELF-TESTING.

GUARANTEED

SEWER GAS AND WATER-TIGHT

SELF-TESTING

The Water Closets for these Flanges are manufactured exclusively by the

Camden Pottery Company
Camden, N. J.

CAMDEN WATER CLOSET BOWLS

Plate 401-H—"Camelon"

Plate 401-H

"Camelon" Two-Fire Vitreous China Elongated Syphon Jet Closet Bowl

Extended Top Inlet, Flat Sanitary Flushing Rim and Square Base.

Center of Inlet to Center of Outlet . 8 ″
Center of Seat Attachment to Front of Rim, 18½″
Height of Bowl . . . . . 15 ″

This Bowl can also be furnished in Juvenile Height (13″ high).

Approximate weight crated, 75 pounds.

For complete Roughing-In measurements see Plate 203-H, Page 24.

Plate 402-H—"Princess"

Plate 402-H

"Princess" Two-Fire Vitreous China Syphon Jet Closet Bowl

Extended Top Inlet, Flat Sanitary Flushing Rim and Square Base.

Center of Inlet to Center of Outlet . 8 ″
Center of Seat Attachment to Front of Rim, 16½″
Height of Bowl . . . . . 15 ″

This Bowl can also be furnished measuring 6½″ Center of Inlet to Center of Outlet.

Approximate weight crated, 70 pounds.

For complete Roughing-In measurements see Plate 205-H, Page 26.

Plate 403-H—"Princess"

Plate 403-H

"Princess" Two-Fire Vitreous China Syphon Jet Closet Bowl

Extended Top Inlet, Flat Sanitary Flushing Rim, Extended Lip and Square Base.

Center of Inlet to Center of Outlet . . 8″
Center of Seat Attachment to Front of Rim, 19″
Height of Bowl . . . . . 15″

This Bowl can also be furnished measuring 6½″ Center of Inlet to Center of Outlet.

Approximate weight crated, 75 pounds.

For complete Roughing-In measurements see Plate 207-H, Page 28.

CAMDEN WATER CLOSET BOWLS

Plate 404-H—"Princess"

Plate 404-H

"Princess" Two-Fire Vitreous China Syphon Jet Closet Bowl

Side Inlet, Flat Sanitary Flushing Rim and Square Base.

Center of Inlet to Center of Outlet . 1½"
Center of Seat Attachment to Front of Rim, 16½"
Center of Inlet to floor . . . . . 10 "
Height of Bowl . . . . . 15 "

Plate 405-H same as above except with Extended Lip.

This Bowl can also be furnished in Juvenile Height (13" high). With or without extended lip.

Approximate weight crated, 70 pounds.

For complete Roughing-In measurements see Plate 304-H, Page 42.

Plate 406-H—"Campus"

Plate 406-H

"Campus" Two-Fire Vitreous China Syphon Jet Closet Bowl

Top Inlet Oval Sanitary Flushing Rim and Oval Base.

Center of Inlet to Center of Outlet . 9 "
Center of Seat Attachment to Front of Rim, 16½"
Height of Bowl . . . . . 15½"

This Bowl can also be furnished measuring 5" from Center of Inlet to Center of Outlet.

Approximate weight crated, 70 pounds.

For complete Roughing-In measurements see Plate 210-H, Page 30.

Plate 407-H—"Cabot"

Plate 407-H

"Cabot" Two-Fire Vitreous China Syphon Jet Closet Bowl

Extended Top Inlet, Oval Sanitary Flushing Rim, Round Raised Rear Vent, China Vent Flange and Oval Base.

Center of Inlet to Center of Outlet . 8 "
Center of Vent to floor . . . . . 17¼"
Center of Seat Attachment to Front of Rim, 16½"
Height of Bowl floor to Top of Rim . 15 "

Furnished with or without China Vent Flange.

Plate 408-H same as above except with Extended Lip.

This Bowl can also be furnished in Juvenile Height (13" high) with or without Extended Lip.

Approximate weight crated, 80 pounds.

For complete Roughing-In measurements see Plate 305-H, Page 44.

CAMDEN WATER CLOSET BOWLS

Plate 409-H—"Princess"

Plate 409-H

"Princess" Two-Fire Vitreous China Juvenile Syphon Jet Closet

Extended Top Inlet, Flat Sanitary Flushing Rim and Square Base.

Center of Inlet to Center of Outlet . 8 "
Center of Seat Attachment to Front of Rim, 16½"
Center of Seat Attachment to Center of Inlet . . . . . 6 "
Height of Bowl . . . . . 13 "

Plate 410-H same as above except with Extended Lip.

Approximate weight crated, 65 pounds.

Plate 411-H—"Colby"

Plate 411-H

"Colby" Two-Fire Vitreous China Syphon Jet Closet Bowl

Wall Outlet, Extended Top Inlet, Oval Sanitary Flushing Rim and Oval Base.

Wall to Center of Inlet for High Tank or Valve . . . . . 3½"
Wall to Center of Inlet for Low Tank, 5 "
Center of Outlet to floor . . . . . 4½"
Height of Bowl . . . . . 15 "

Plate 412-H same as above except with Extended Lip.

Approximate weight created, 75 pounds.

For complete Roughing-In measurements see Plate 211-H, Page 32.

Plate 413-H—"Cameron"

Plate 413-H

"Cameron" Two-Fire Vitreous China Syphon Jet Closet Bowl

Integral Seat, Extended Top Inlet, Oval Sanitary Flushing Rim and Oval Base.

Center of Inlet to Center of Outlet . 6½"
Height of Bowl . . . . . 15 "

Approximate weight crated, 70 pounds.

For complete Roughing-In measurements see Plate 212-H, Page 32.

CAMDEN WATER CLOSET BOWLS

Plate 420-H—"Croton"

Plate 420-H

"Croton" Two-Fire Vitreous China Reverse Trap Closet Bowl

Back Inlet, Flat Sanitary Flushing Rim and Square Base.

Center of Outlet to Face of Brass Spud, 4 ″
Center of Back Inlet to floor . . . 13 ″
Center of Seat Attachment to Front of Rim, 16½″
Height of Bowl . . . . . 15 ″

This Bowl can also be furnished measuring 6″ Center of Outlet to Face of Brass Spud for 14″ Roughing.

Approximate weight crated, 55 pounds.

For complete Roughing-In measurements see Plate 220-H, Page 34.

Plate 421-H—"Croton"

Plate 421-H

"Croton" Two-Fire Vitreous China Reverse Trap Closet Bowl

With Jet, Extended Lip, Back Inlet, Flat Sanitary Flushing Rim and Square Base.

Center of Outlet to Face of Brass Spud . 4″
Center of Back Inlet to floor . . . . 13″
Center of Seat Attachment to Front of Rim, 19″
Height of Bowl . . . . . 15″

This Bowl can also be furnished measuring 6″ Center of Outlet to Face of Brass Spud for 14″ Roughing.

Approximate weight crated, 60 pounds.

For complete Roughing-In measurements see Plate 222-H, Page 34.

Plate 422-H—"Croton"

Plate 422-H

"Croton" Two-Fire Vitreous China Reverse Trap Closet Bowl

With Jet, Side Inlet, Flat Sanitary Flushing Rim and Square Base.

Center of Inlet to Center of Outlet . 3 ″
Center of Inlet to floor . . . . . 10 ″
Center of Seat Attachment to Front of Rim, 16½″
Height of Bowl . . . . . 15 ″

Approximate weight crated, 55 pounds.

CAMDEN WATER CLOSET BOWLS

Plate 423-H—"Croton"

Plate 423-H

"Croton" Two-Fire Vitreous China Reverse Trap Closet Bowl

With Jet, Extended Lip, Side Inlet, Flat Sanitary Flushing Rim and Square Base.

Center of Inlet to Center of Outlet . . 3″
Center of Inlet to floor . . . . . 10″
Center of Seat Attachment to Front of Rim, 19″
Height of Bowl . . . . . 15″

Approximate weight crated, 60 pounds.

For complete Roughing-In measurements see Plate 309-H, Page 46.

Plate 430-H—"Latona"

Plate 430-H

"Latona" Two-Fire Vitreous China Syphon Action Washdown Closet Bowl

Back Inlet, Flat Sanitary Flushing Rim and Square Base.

Center of Outlet to Face of Brass Spud, 6 ″
Center of Back Inlet to floor . . . 13 ″
Center of Seat Attachment to Front of Rim, 16½″
Height of Bowl . . . . . 15 ″

This Bowl can also be furnished measuring 4″ Center of Outlet to Face of Brass Spud for 12″ Roughing.

Approximate weight crated, 55 pounds.

For complete Roughing-In measurements see Plate 230-H, Page 36.

Plate 431-H—"Colwick"

Plate 431-H

"Colwick" Two-Fire Vitreous China Syphon Action Washdown Closet Bowl

Back Inlet Flat Sanitary Flushing Rim and Square Base.

Center of Outlet to Face of Brass Spud, 6 ″
Center of Back Inlet to floor . . . 13 ″
Center of Seat Attachment to Front of Rim, 16½″
Height of Bowl . . . . . 15 ″

This Bowl can also be furnished in Juvenile Height (13″ high) with Oval Base.

Approximate weight crated, 55 pounds.

For complete Roughing-In measurements see Plate 232-H, Page 36.

CAMDEN WATER CLOSET BOWLS

Plate 432-H—"Colwick"

Plate 432-H

"Colwick" Two-Fire Vitreous China Syphon Action Washdown Closet Bowl

Extended Lip, Back Inlet, Flat Sanitary Flushing Rim and Square Base.

Center of Outlet to Face of Brass Spud, 6 ″
Center of Back Inlet to floor . . . 13 ″
Center of Seat Attachment to Front of Rim, 18½″
Height of Bowl . . . . . 16 ″

Plate 433-H same as above except with Side Inlet.

Approximate weight crated, 60 pounds.

For complete Roughing-In measurements see Plate 234-H, Page 38.

Plate 434-H—"Latona"

Plate 434-H

"Latona" Two-Fire Vitreous China Syphon Action Washdown Closet Bowl

Side Inlet, Flat Sanitary Flushing Rim and Square Base.

Center of Outlet to Center of Side Inlet, 3 ″
Center of Side Inlet to floor . . . 10 ″
Center of Seat Attachment to Front of Rim, 16½″
Height of Bowl . . . . . 15 ″

Approximate weight crated, 55 pounds.

For complete Roughing-In measurements see Plate 312-H, Page 50.

Plate 435-H—"Cambridge"

Plate 435-H

"Cambridge" Two-Fire Vitreous China Syphon Action Washdown Closet Bowl

Top Inlet, Oval Sanitary Flushing Rim, Round Raised Rear Vent, China Vent Flange and Oval Base.

Center of Inlet to Center of Outlet . 8½″
Center of Vent to floor . . . . . 17¼″
Center of Seat Attachment to Front of Rim, 16½″
Height of Bowl—floor to Top of Rim . 15 ″

Furnished with or without China Vent Flange.

Plate 436-H same as above except with Extended Lip.

This Bowl can also be furnished in Juvenile Height (13″ high) with or without Extended Lip.

Approximate weight crated, 75 pounds.

For complete Roughing-In measurements see Plate 313-H, Page 50.

CAMDEN WATER CLOSET BOWLS

Plate 437-H—"Congo"

Plate 437-H

"Congo" Two-Fire Vitreous China Close-Rough Syphon Action Washdown Closet Bowl

Back Inlet, Oval Sanitary Flushing Rim and Oval Base.

Center of Outlet to Face of Brass Spud, 2½"
Center of Back Inlet to floor . . . 13½"
Center of Seat Attachment to Front of Rim, 16½"
Height of Bowl . . . . . 16 "

Plate 438-H same as above except to measure 1½" Center of Outlet to Face of Brass Spud for 9" Roughing.

Approximate weight crated, 60 pounds.

Plate 439-H—"Colon"

Plate 439-H

"Colon" Two-Fire Vitreous China Syphon Action Washdown Closet Bowl

Top Inlet, Oval Sanitary Flushing Rim and Oval Base.

Center of Inlet to Center of Outlet . 7¾"
Center of Inlet to Center of Seat Attachment . . . . . 3¾"
Center of Seat Attachment to Front of Rim, 16½"
Height of Bowl . . . . . 16 "

Approximate weight crated, 60 pounds.

Plate 440-H—"Cobden

Plate 440-H

"Cobden" Two-Fire Vitreous China Center Outlet Syphon Action Washdown Closet Bowl

Back Inlet, Oval Sanitary Flushing Rim and Oval Base.

Center of Outlet to Face of Brass Spud, 9 "
Center of Back Inlet to floor . . . 14 "
Center of Seat Attachment to Front of Rim, 16½"
Height of Bowl . . . . . 16 "

Plate 441-H same as above except made 11" center of Outlet to Face of Brass Spud.

Approximate weight crated, 60 pounds.

CAMDEN WATER CLOSET BOWLS

Plate 442-H—"Cobham"

Plate 442-H

"Cobham" Two-Fire Vitreous China Syphon Action Washdown Closet Bowl

With Integral Seat, Back Inlet, Oval Sanitary Flushing Rim and Oval Base.

Center of Outlet to Face of Brass Spud . 6″
Center of Back Inlet to floor . . . . 14″
Height of Bowl . . . . . 16″

Approximate weight crated, 55 pounds.

Plate 450-H—"Coburg

Plate 450-H

"Coburg" Two-Fire Vitreous China Semi-Heavy Washdown Closet Bowl

Back Inlet, Oval Sanitary Flushing Rim and Oval Base.

This Bowl is made with large opening through Trap and is especially recommended for factory use.

Center of Outlet to Face of Brass Spud, 10 ″
Center of Back Inlet to floor . . . 13½″
Center of Seat Attachment to Front of Rim, 16½″
Height of Bowl . . . . . 16 ″

Approximate weight crated, 55 pounds.

Plate 451-H—"Coburg"

Plate 451-H

"Coburg" Two-Fire Vitreous China Semi-Heavy Washdown Closet Bowl

With Integral Seat, Back Inlet, Oval Sanitary Flushing Rim and Oval Base.

This Bowl is constructed the same as Plate 450-H except made with Integral Seat, and is also recommended for public or factory use.

Center of Outlet to Face of Brass Spud . 10″
Center of Back Inlet to floor . . . . 14″
Height of Bowl . . . . . 16″

Approximate weight crated, 55 pounds.

CAMDEN WATER CLOSET BOWLS

Plate 460-H—"Colfax"

Plate 460-H

"Colfax" Two-Fire Vitreous China Extra Heavy Washdown Closet Bowl

Back Inlet, Oval Sanitary Flushing Rim and Oval Base.

Center of Outlet to Face of Brass Spud, 12 ″
Center of Back Inlet to floor . . . 14½″
Center of Seat Attachment to Front of Rim, 16½″
Height of Bowl . . . . . 16½″

Approximate weight crated, 65 pounds.

Plate 461-H—"Colfax"

Plate 461-H

"Colfax" Two-Fire Vitreous China Extra Heavy Washdown Closet Bowl

With Integral Seat, Back Inlet, Oval Sanitary Flushing Rim and Oval Base.

Center of Outlet to Face of Brass Spud, 12 ″
Center of Back Inlet to floor . . . 14¾″
Height of Bowl . . . . . 16½″

Approximate weight crated, 65 pounds.

Plate 462-H—"Coptic"

Plate 462-H

"Coptic" Two-Fire Vitreous China Extra Heavy Syphon Action Washdown Closet Bowl

Back Inlet, Oval Sanitary Flushing Rim and Oval Base.

Can be furnished with or without Jet.

Center of Outlet to Face of Brass Spud, 8½″
Center of Back Inlet to floor . . . 14¼″
Center of Seat Attachment to Front of Rim, 16½″
Height of Bowl . . . . . 16½″

Approximate weight crated, 70 pounds.

CAMDEN WATER CLOSET BOWLS

Plate 463-H — "Coptic"

Plate 463-H

"Coptic" Two-Fire Vitreous China Extra Heavy Syphon Action Washdown Closet Bowl

With Integral Seat, Back Inlet, Oval Sanitary Flushing Rim and Oval Base.

Can be furnished with or without Jet.

Center of Outlet to Face of Brass Spud, 8½"
Center of Back Inlet to floor . . . 14¼"
Height of Bowl . . . . . 16½"

Approximate weight crated, 75 pounds.

Plate 464-H — "Cortez"

Plate 464-H

"Cortez" Two-Fire Vitreous China Extra Heavy Syphon Action Washdown Closet Bowl

With Jet, Integral Seat, Back Inlet, Non-Soiling Flushing Rim, Cut-Out Front and Back and Oval Base.

Center of Outlet to Face of Brass Spud, 8½"
Center of Back Inlet to floor . . . 15¾"
Height of Bowl . . . . . 17¼"

Approximate weight crated, 75 pounds.

Plate 465-H — "Canton"

Plate 465-H

"Canton" Two-Fire Vitreous China Extra Heavy Washdown Closet Bowl

With Integral Seat, Wall Outlet and Back Inlet, Oval Sanitary Flushing Rim and Oval Base.

This Closet is recommended for use in prisons or public institutions.

Center of Back Inlet to floor . . . 13¾"
Center of Outlet to floor . . . . 7 "
Center of Inlet to Center of Outlet . 6¾"
Height of Bowl . . . . . 15½"

Approximate weight crated, 75 pounds.

CAMDEN WATER CLOSET BOWLS

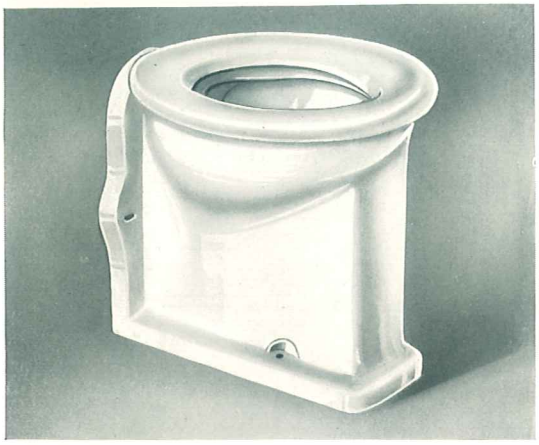

Plate 466-H — "Colgate"

Plate 466-H

"Colgate" Two-Fire Vitreous China Extra Heavy Washdown Prison Closet Bowl

Angle to Wall with Integral Seat, Back Inlet and Back Outlet, Oval Sanitary Flushing Rim and Angle Base.

Can also be furnished with Floor Outlet.

Center of Back Inlet to floor	14½″
Center of Back Outlet to floor	7½″
Center of Inlet to Center of Outlet	7 ″
Center of Floor Outlet to wall	11¼″
Back of Bowl to Front of Rim	17½″
Height of Bowl	17 ″

Approximate weight crated, 80 pounds.

Plate 467-H — "Corvus"

Plate 467-H

"Corvus" Two-Fire Vitreous China Combination Hopper and Trap Closet Bowl

With Oval Sanitary Flushing Rim and Oval Base.

Center of Outlet to Face of Brass Spud,	9 ″
Center of Back Inlet to floor	13 ″
Center of Seat Attachment to Front of Rim,	16½″
Height of Bowl	15 ″

Can also be furnished to measure 11″ Center of Outlet to Face of Brass Spud.

Approximate weight crated, 50 pounds.

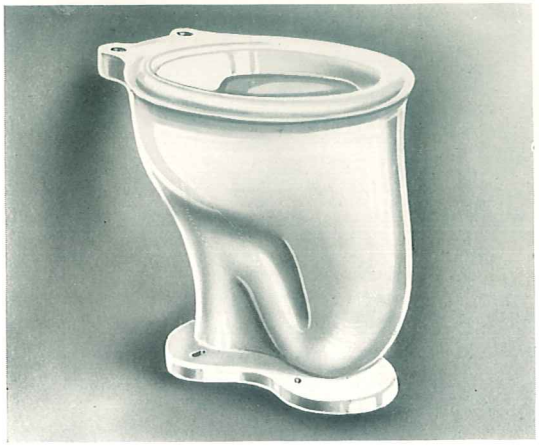

Plate 468-H — "Coster"

Plate 468-H

"Coster" Two-Fire Vitreous China No. 3 Front Outlet Washout Closet Bowl

With Oval Sanitary Flushing Rim and Oval Base.

Center of Outlet to Face of Brass Spud,	7 ″
Center of Back Inlet to floor	13½″
Center of Seat Attachment to Front of Rim,	16½″
Height of Bowl	15½″

Can also be furnished Back Outlet measuring 12″ from Center of Outlet to Face of Brass Spud.

Approximate weight crated, 50 pounds.

Co
"Capoco"

CAMDEN CLOSET TANKS

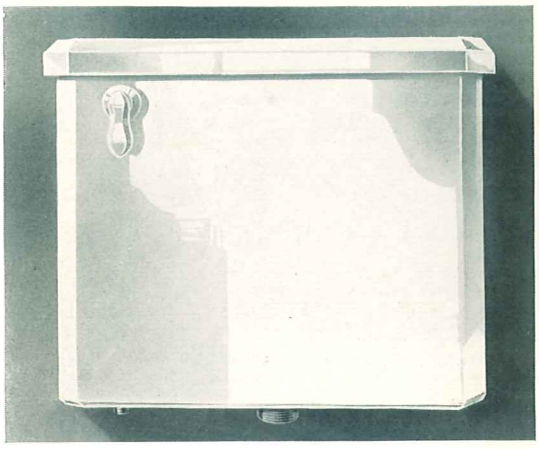

Plate 501-H
Plate 502-H

Plate 503-H
Plate 504-H

Plate 505-H
Plate 506-H

Plate 507-H
Plate 508-H

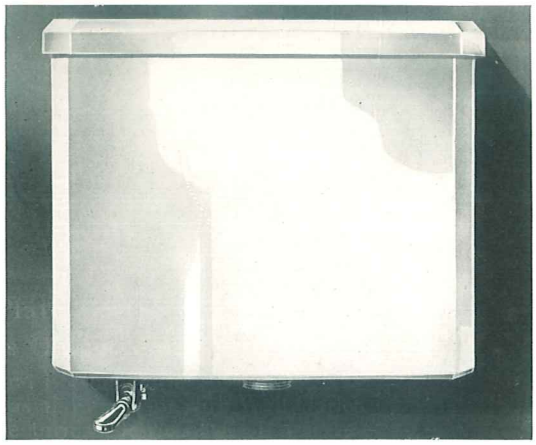

Plate 509-H

Plate 501-H

"Princess" Eight-Gallon Tank, complete with Competitive Fittings.

Plate 502-H

"Princess" Eight-Gallon Tank, Shell less Fittings.

Plate 503-H

"Latona" Seven-Gallon Tank, complete with Competitive Fittings.

Plate 504-H

"Latona" Seven-Gallon Tank, Shell less Fittings.

Plate 505-H

"Columbia" Eight-Gallon Tank, complete with Competitive Fittings.

Plate 506-H

"Columbia" Eight-Gallon Tank, Shell less Fittings.

Plate 507-H

"Eastern" Seven-Gallon Tank, complete with Competitive Fittings.

Plate 508-H

"Eastern" Seven-Gallon Tank, Shell less Fittings.

Plate 509-H

"Princess" Eight-Gallon Bottom Lever Tank, complete with Competitive Fittings.

CAMDEN CLOSET TANKS

Roughing-In Measurements

Plate 501-H

Plate 502-H

"Princess" Eight-Gallon Tanks

For complete measurements on the above Tanks see Roughing-In measurements, **Plate 203-H**, Page 24.

Plate 503-H

Plate 504-H

"Latona" Seven-Gallon Tanks

For complete measurements on the above Tanks see Roughing-In measurements, **Plate 220-H**, Page 34.

Plate 505-H

Plate 506-H

"Columbia" Eight-Gallon Tanks

For complete measurements on the above Tanks see Roughing-In measurements, **Plate 201-H**, Page 22.

Plate 507-H

Plate 508-H

"Eastern" Seven-Gallon Tanks

For complete measurements on the above tanks see roughing in measurements, **Plate 232-H**, Page 36.

Plate 509-H

"Princess" Eight-Gallon Bottom Lever Tank

For complete measurements on the above Tank see Roughing-In measurements, **Plate 209-H**, Page 30.

All measurements in this catalog may vary from ¼" to ½".

CAMDEN CLOSET TANKS

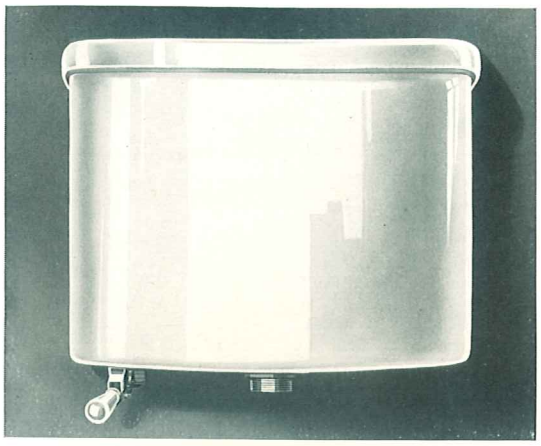

Plate 511-H

"Columbia" Eight-Gallon Bottom Lever Tank, complete with Competitive Fittings.

Plate 512-H

"Columbia" Eight-Gallon Bottom Lever Tank, Shell less Fittings.

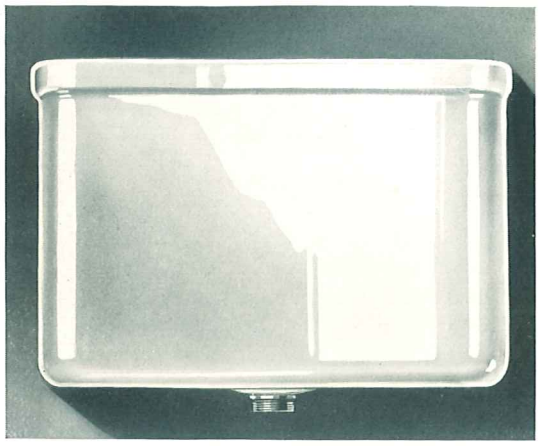

Two-Fire Vitreous China High Tank
With Top Supply

Plate 513-H Two-Gallon Capacity
Plate 515-H Six-Gallon Capacity
Plate 514-H Four-Gallon Capacity
Plate 516-H Eight-Gallon Capacity

The Four, Six and Eight-Gallon Tanks can be furnished for either Chain and Pull or Automatic Fittings. Two-Gallon Tanks are furnished with Automatic Fittings only.

High Tank measurements on back of this Page.

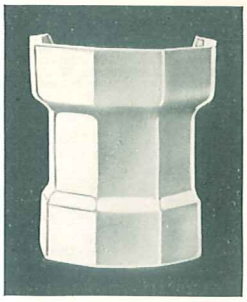

Plate 600-H
Vitreous China Hexagon Housing for straight flush connection.

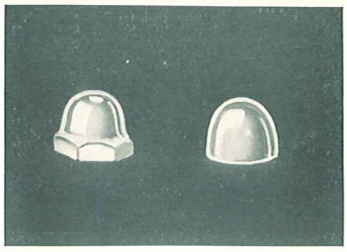

Plate 601-H
Vitreous China Bolt Cap, Hexagon style.

Plate 602-H
Vitreous China Bolt Cap, Plain style.

Rear View of Housings, showing Fastening Clamp.

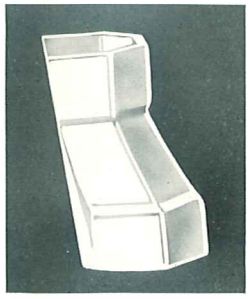

Plate 603-H
Vitreous China Hexagon Housing for offset flush connection. Offset ½" to 2".

Plate 604-H
Vitreous China Plain Housing for straight flush connection.

CAMDEN CLOSET TANKS

Roughing-In Measurements

Plate 511-H

Plate 512-H

For complete measurements on the above Tanks see Roughing-In measurements of **Plate 202-H,** Page 22.

High Tank Measurements

Plate 513-H

Two-Gallon Capacity
14″ long x 8″ wide outside x 9″ deep inside

Plate 514-H

Four-Gallon Capacity
16″ long x 9″ wide outside x 11½″ deep inside

Plate 515-H

Six-Gallon Capacity
18″ long x 10″ wide outside x 12″ deep inside

Plate 516-H

"NAROWENE" TANK

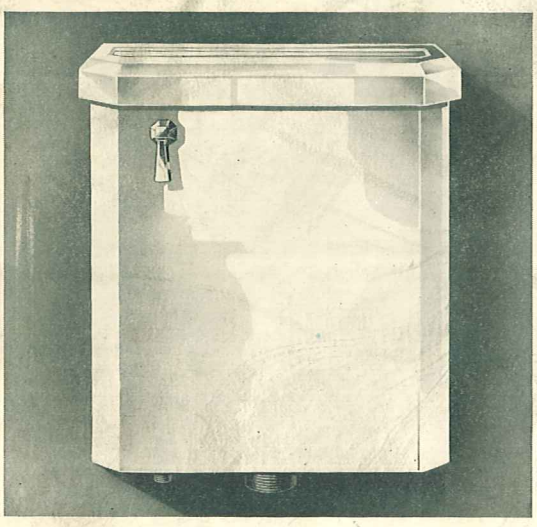

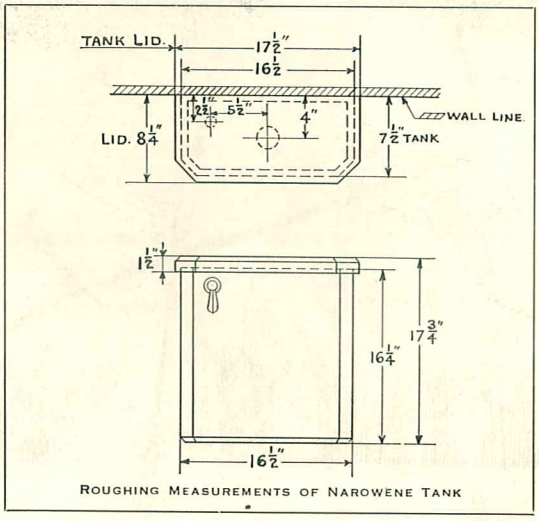

ROUGHING MEASUREMENTS OF NAROWENE TANK

The "Narowene" Vitreous China Tank with depressed lid is of the latest design. This tank measures only 17½ inches in width over all.

The tank is furnished complete with fittings, including chrome lever, supply and elbow or offset connection.

A convenient size for use where space is limited.

There is always a demand for a narrow tank and no jobbers' stock is complete without them.
Send us your order today.

Manufactured by **CAMDEN POTTERY COMPANY,** CAMDEN, NEW JERSEY

CAMDEN
BASINS, URINALS, HOPPERS
AND
SPECIALTIES

BASINS, URINALS, HOPPERS, ETC.

"Capoco"

BASINS, URINALS, HOPPERS, ETC.

CAMDEN EARTHENWARE BASINS

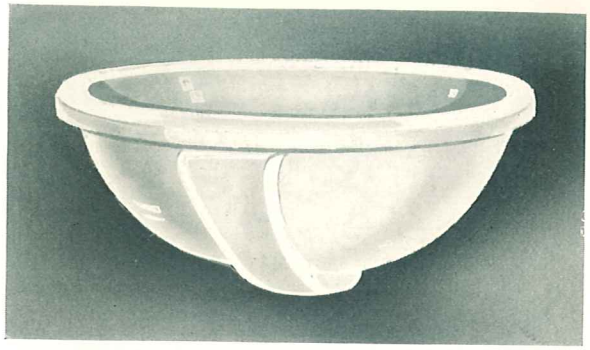

Plate 701-H

Oval Basins

Made in 14 x 17″, 15 x 19″ and 16 x 21″ sizes

Common Overflow
Patent Overflow
Rubber-Plug Overflow
No Overflow

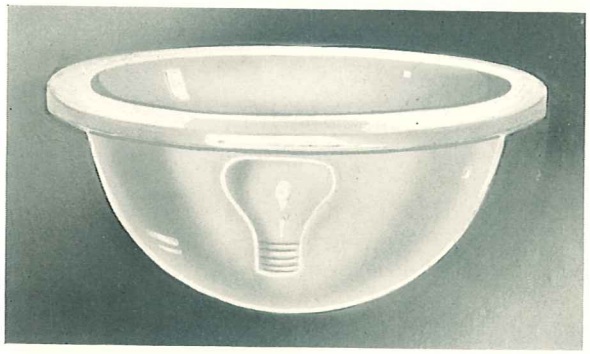

Plate 702-H

Round Basins

Made in all sizes from 12″ to 16″

Common Overflow
Patent Overflow
Rubber-Plug Overflow
No Overflow

Plate 703-H

Oval Straight Back Basins

Made in 14 x 17″ and 15 x 19″ sizes
With and without Overflow

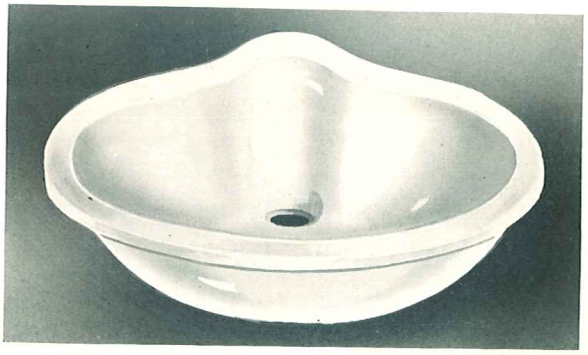

Plate 704-H

Oval Recess Basins

Made in 14 x 17″ and 15 x 19″ sizes

CAMDEN EARTHENWARE BASINS

List Prices on Basins

ROUND BASINS

12″ No Overflow	List,	$2.00
13″ " "	"	2.00
14″ " "	"	2.00
15″ " "	"	3.00
16″ " "	"	4.00
12″ Common Overflow	"	2.00
13″ " "	"	2.00
14″ " "	"	2.00
15″ " "	"	3.00
16″ " "	"	4.00
12″ Patent Overflow	"	2.50
13″ " "	"	2.50
14″ " "	"	2.50
15″ " "	"	4.00
16″ " "	"	5.00
12″ Rubber Plug	"	3.00
13″ " "	"	3.00
14″ " "	"	3.00
15″ " "	"	5.00
16″ " "	"	6.00

OVAL BASINS

14 x 17″ No Overflow	List,	$5.00
15 x 19″ " "	"	7.00
16 x 21″ " "	"	9.00
14 x 17″ Common Overflow	"	5.00
15 x 19″ " "	"	7.00
16 x 21″ " "	"	9.00
14 x 17″ Patent Overflow	"	6.00
15 x 19″ " "	"	8.00
16 x 21″ " "	"	10.00
14 x 17″ Rubber Plug	"	7.00
15 x 19″ " "	"	9.00
16 x 21″ " "	"	11.00

OVAL RECESS BASINS

14 x 17″ No Overflow	List,	$10.00
15 x 19″ " "	"	12.00

OVAL STRAIGHT BACK BASINS

14 x 17″ No Overflow	List,	$9.00
15 x 19″ " "	"	11.00
14 x 17″ Patent Overflow	"	10.00
15 x 19″ " "	"	12.00

CAMDEN WALL-HUNG URINALS

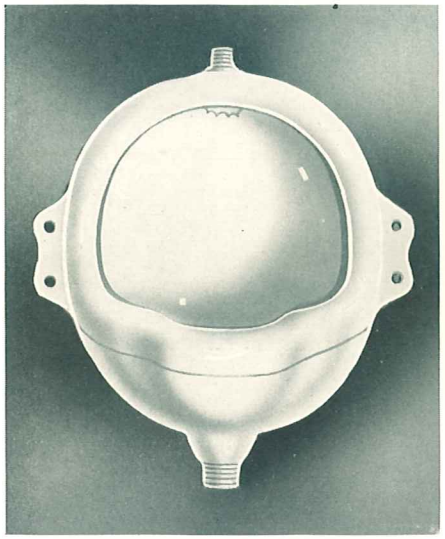

Plate 710-H

Two-Fire Vitreous China "Bedfordshire" Flat Back Lip Urinal

This Urinal in No. 1, No. 2 and No. 3 sizes is furnished for putty joint connection.

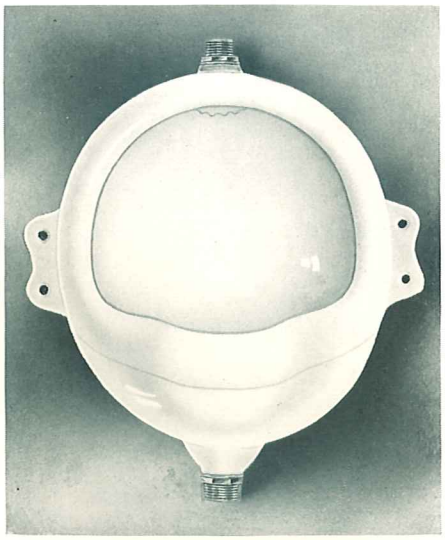

Plate 711-H

Two-Fire Vitreous China "Bedfordshire" Flat Back Lip Urinal

This Urinal, in No. 1 and No. 2 sizes, can be furnished with ¾″ or 1″ I. P. S. Inlet Spud and 1¼″ or 1½″ I. P. S. Outlet Spud.

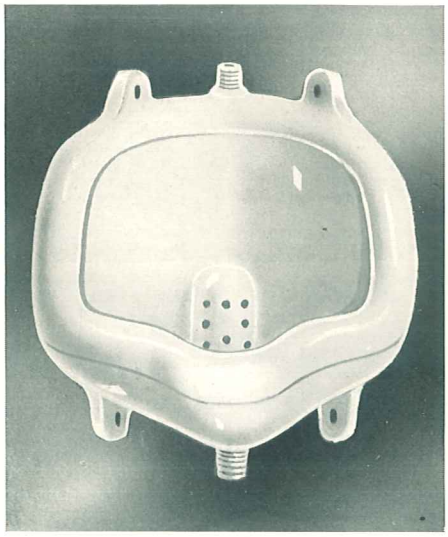

Plate 712-H

Two-Fire Vitreous China "Bedfordshire" Corner Lip Urinal

This Urinal, in the No. 2 Size, can be furnished with ¾″ or 1″ I. P. S. Inlet Spud and 1¼″ or 1½″ I. P. S. Outlet Spud.

For Roughing-In measurements see back of this page.

CAMDEN WALL-HUNG URINALS

Roughing-In Measurements

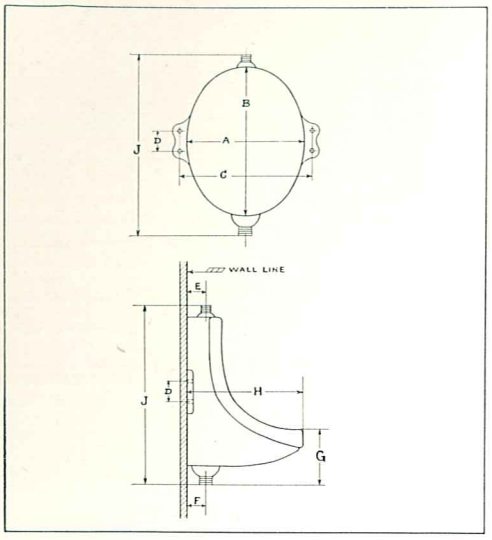

Plate 710-H
Plate 711-H

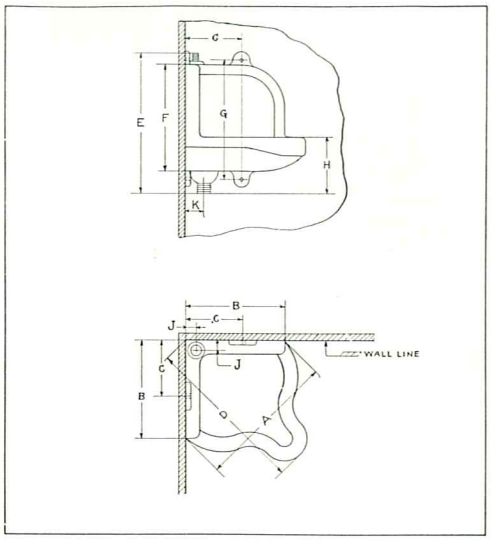

Plate 712-H

	Size	A	B	C	D	E	F	G	H	J	K
Plates 710-H and 711-H .	*1	14¾	18¾	16½	2½	2¼	2¼	7	14¼	22½	. . .
	*2	13½	15	14¾	2½	1¼	2¼	6¾	12¾	19½	. . .
	3	12½	14½	14¼	2½	1¼	2¼	6¾	12	19	. . .
Plate 712-H	1	17½	12¼	7	20	17½	13	14¾	7	1¼	2¼
	*2	15½	11	6¾	16½	15¾	11	13	7	1¼	2¼
	3	13½	10	6½	14¼	14¾	10	11½	6¾	1¼	2¼

*Note: Plate 711-H can be furnished only in No. 1 and No. 2 Size fitted with Brass Spud Inlet and Outlet. ¾″ or 1″ I. P. S. Inlet; 1¼″ or 1½″ I. P. S. Outlet.

Plate 712-H can be furnished only in No. 2 Size fitted with Brass Spud Inlet and Outlet. ¾″ or 1″ I. P. S. Inlet; 1¼″ or 1½″ I. P. S. Outlet.

When furnished with Spuds add one inch to measurement J for Roughing-In.

All measurements in this catalog may vary from ¼″ to ½″.

CAMDEN WALL-HUNG URINALS

Plate 713-H

Two-Fire Vitreous China Integral Trap Washout Urinal

With Top Supply and Wall Outlet.
This Urinal can be furnished with ¾″ or 1″ I. P. S. Top Inlet Spud and 2″ I. P. S. Wall Outlet Spud.

Plate 714-H

Two-Fire Vitreous China Integral Trap Washout Urinal

With Wall Inlet and Wall Outlet.
This Urinal is furnished with ¾″ Wall Inlet Spud and 2″ I. P. S. Wall Outlet Spud.

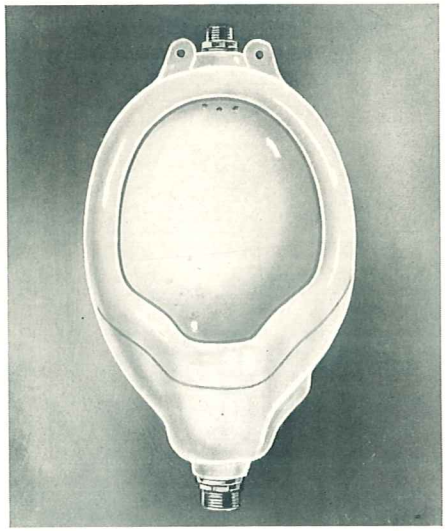

Plate 715-H

Two-Fire Vitreous China Syphon Jet Urinal

With Top Supply and Bottom Outlet.
Plate 716-H same as above except with Wall Outlet.
This Urinal can be furnished with ¾″, 1″ or 1¼″ I. P. S. Top Inlet Spud, 1¼″, 1½″ or 2″ I. P. S. Bottom Outlet Spud, or 2″ I. P. S. Wall Outlet Spud.

For Roughing-In measurements see back of this page.

CAMDEN WALL-HUNG URINALS

Roughing-In Measurements

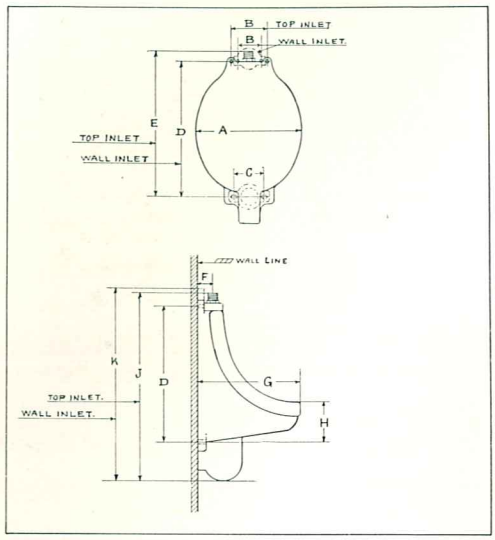

Plate 713-H
Plate 714-H

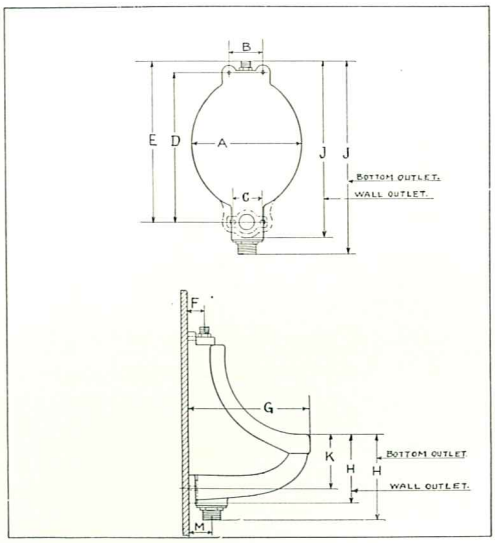

Plate 715-H
Plate 716-H

Plate 713-H can be furnished with ¾″ or 1″ I. P. S. Top Inlet Spud and 2″ I. P. S. Wall Outlet Spud.

Plate 714-H is furnished with ¾″ I. P. S. Wall Inlet Spud and 2″ I. P. S. Wall Outlet Spud.

Plate 715-H can be furnished with ¾″, 1″ or 1¼″ I. P. S. Top Inlet Spud and 1¼″, 1½″ or 2″ I. P. S. Bottom Outlet Spud.

Plate 716-H can be furnished with ¾″, 1″ or 1¼″ I. P. S. Top Inlet Spud and 2″, I. P. S. Wall Outlet Spud.

	A	B	C	D	E	F	G	H	J	K	M
Plate 713-H Top Inlet and Wall Outlet	13½	4¼	4	16¼	18	2	13	5	22½	..	...
Plate 714-H Wall Inlet and Wall Outlet	13½	3	4	17	....	.	13	5	....	23	...
Plate 715-H Top Inlet and Bottom Outlet . . .	13¾	4¼	.	....	....	2	15	10	23	..	2½
Plate 716-H Top Inlet and Wall Outlet	13¾	4¼	4	18½	19¾	2	15	8	21¾	6	...

All measurements in this catalog may vary from ¼″ to ½″.

CAMDEN EARTHENWARE HOPPERS

Plate 720-H
Two-Fire Vitreous China
Tall Oval Flushing Rim Hopper
With or without Seat Attachment
List $13.00
Spud and crating extra

Plate 721-H
Two-Fire Vitreous China
Tall Round Flushing Rim Hopper
With or without Seat Attachment
List $10.00
Spud and crating extra

Plate 722-H
Two-Fire Vitreous China
Short Oval Flushing Rim Hopper
With or without Seat Attachment
List $7.00
Spud and crating extra

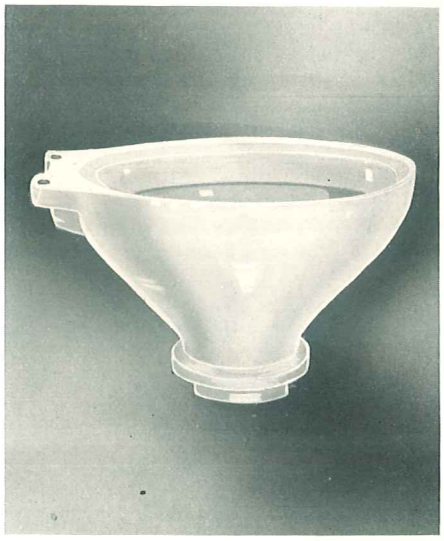

Plate 723-H
Two-Fire Vitreous China Short
Round Flushing Rim Hopper
With or without Seat Attachment
List $5.00
Spud and crating extra

"Capoco"

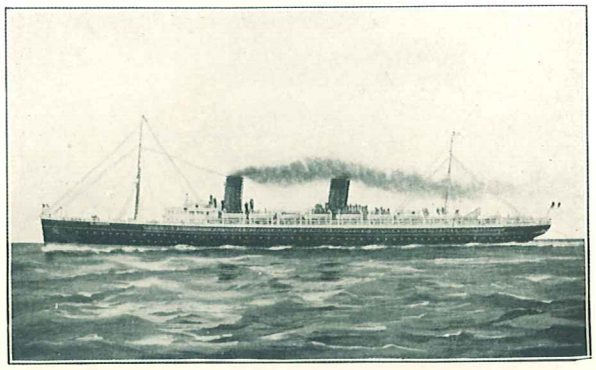

We manufacture and are prepared to furnish a full line of Two-Fire Vitreous China Marine Earthenware, including Pump Hoppers, Tip Basins, Water Closet Combinations and Lavatory Combinations. Where desired, any of these items can be furnished according to U. S. Navy specifications.

Thousands of fixtures manufactured by the Camden Pottery Company are giving perfect service on many of the largest warships and most luxurious liners and private yachts afloat.

We will be pleased to submit specifications and prices on request.

S. H. BURBANK & CO., INC.
PHILADELPHIA